ROAD VEHICLE EMERGENCY AND RECOVERY

Doc 81/21

Revision of Doc 81/06

EUROPEAN INDUSTRIAL GASES ASSOCIATION AISBL

AVENUE DE L'ASTRONOMIE 30 • B – 1210 BRUSSELS
Tel: +32 2 217 70 98
E-mail: info@eiga.eu • Internet: www.eiga.eu

Doc 81/21

ROAD VEHICLE EMERGENCY AND RECOVERY

Prepared by WG-1

Disclaimer

EUROPEAN INDUSTRIAL GASES ASSOCIATION AISBL
Avenue de l'Astronomie 30 B 1210 Brussels Tel +32 2 217 70 98
E-mail: info@eiga.eu Internet: www.eiga.eu

Table of Contents

1 Introduction 1
2 Scope and purpose 1
2.1 Scope 1
2.2 Purpose 2
3 Definitions 2
3.1 Publication terminology 2
3.2 Technical definitions 2
4 Vehicles and equipment 4
4.1 Tank vehicles (road tankers and tank containers) 4
4.2 Battery vehicles 6
4.3 Weight of the vehicle / equipment and product 7
4.4 Design, construction and general arrangement drawings 8
4.5 Design and construction details of pipework / manifolding arrangement 8
4.6 Contents and pressure gauges 8
4.7 Safety devices 8
4.8 Product fill and discharge couplings 10
4.9 Tractor/trailer connection 10
5 Priorities 10
5.1 Safety of individuals 10
5.2 Animals 11
5.3 Prevention of escalation of the transport emergency event 11
5.4 Prevention of impact on surrondings 11
5.5 Publicity unfavourable to the industrial gases industry 11
5.6 Legal aspects 11
5.7 Cost of the transport emergency event 12
6 Transport emergency plan 12
7 Contact list 13
8 Transport emergency event equipment 14
9 Communication flow chart 14
10 Concerns / actions by transport emergency team leader 15
10.1 Prior to arrival at the transport emergency event 15
10.2 On arrival at the transport emergency event 15
11 Recovery methods 16
11.1 Choice of recovery method 16
11.2 Use of cranes or recovery vehicles 16
11.3 Where to fix slings / chains / airbags / straps 17
11.4 Product handling 20
12 Dynamic risk assessment 25
13 Post transport emergency event actions 26
13.1 Post transport emergency event checks 26
13.2 Return of vehicle to base or work shop 26
13.3 Driver Interviews 26
13.4 Post transport emergency event review 27
13.5 Training 28
13.6 Safety 28
14 References 28
Appendix A – Example of a Process and Instrumentation Diagram for a Vacuum Insulated Tanker 30

Appendix B – Cross Section of Road Tanker 31
Appendix C – Photographs of Typical Road Transport Equipment 32
Appendix D – Communications during transport emergency events 34
Appendix E – Typical Check List For Person Receiving Emergency Telephone Call 36
Appendix F – Example of a Transport Emergency Communications Flow Chart 38
Appendix G – Example of Typical Transport Emergency Equipment 42
Appendix H – Tanker Recovery 46
Appendix I – Safety aspects concerning Vapour Clouds 49
Appendix J – Safety aspects concerning Fire 51
Appendix K – Safety aspects concerning Toxic gases 54

Amendments to 81/06

Section	Change
all	The entire document has been reviewed and updated

Note: Exceptionally Technical changes from the previous edition are not underlined because there were too many changes.

1 Introduction

This publication has been prepared by experts from the Industrial Gases Industry to help minimise the effects of serious road vehicle incidents involving gases industry products by providing recommended guidance, training and procedures to be followed.

Road vehicle incidents involving gases industry products can be extremely serious. The dangers can be at their worst during the recovery operation, particularly, if the recovery is not managed in a safe and professional manner by those at the scene.

Due to the unplanned nature of any transport emergency, safety has to be given the highest priority.

This publication provides information about transported products, identification of the products and some of the design features of gases industry road transport equipment. The publication also provides advice on product handling, vehicle recovery, preparing transport emergency plans, safety aspects and training.

2 Scope and purpose

2.1 Scope

This publication is intended for all persons both within and outside the gases industry who could become involved in a gases industry road vehicle emergency or recovery operation. This can include hauliers under contract, emergency service personnel, vehicle recovery operators and members of other organisations, such as environmental agencies.

This publication provides guidance on road vehicle recovery, and on the following:

- product safety information;
- incidents where there is product release or potential product release;
- damage to pressure vessels/receptacles (e.g. cylinders, tubes and bundles) and manifolds;
- prevention of fire; and,
- fires which may have occurred.

Road transport equipment includes road tankers (vacuum insulated), road tankers (insulated), tank containers, multiple-element gas containers (MEGCs) and battery vehicles manufactured for the products covered in Section 4.0 when full, part full and nominally empty.

Other equipment, cylinder vehicles and vehicles owned by customers and used to carry pressure receptacles are not included, but some of the principles and guidelines may be applicable. Gases Industry railway wagons are not included in the scope of this publication, but the principles involved are generally similar.

The products of ADR Class 2 which are listed in Section 4.0 are included (compressed, refrigerated liquefied and dissolved gases). LPG products and other liquefied gases are not included within the scope of this document.

EIGA has published TP08 for training concerning vehicle emergencies and vehicle recovery. The training package contains an extensive collection of photos of typical equipment, recovey methods and other details. These are not shown in this publication in order to keep the publication at a reasonable length.

2.2 Purpose

The purpose is:

- to provide information to Gases Industry vehicle operators, hauliers under contract, Emergency Service personnel, vehicle recovery operators and members of other organisations (e.g. Environmental Agency);

- to provide guidance, training material and procedures to be followed in order to minimise the effects of a transport emergency event. This will include guidance relating to emergency incident planning, the procedures and actions to be followed during any transport emergency event;

- to provide specific Gases Industry product and vehicle/equipment information to promote maximum co-operation from all those involved in an incident, particularly the emergency services;

- to provide guidance on the follow up actions required to ensure that any lessons learned are considered, and incorporated into future emergency planning to avoid repetition of the transport emergency event.

3 Definitions

3.1 Publication terminology

3.1.1 Shall

Indicates that the procedure is mandatory. It is used wherever the criterion for conformance to specific recommendations allows no deviation.

3.1.2 Should

Indicates that a procedure is recommended.

3.1.3 May

Indicates that the procedure is optional.

3.1.4 Will

Is used only to indicate the future, not a degree of requirement.

3.1.5 Can

Indicates a possibility or ability.

3.2 Technical definitions

3.2.1 Battery vehicle

An assembly of cylinders, tubes, or bundles connected to a manifold and permanently mounted on a vehicle chassis such that the assembly is filled, transported and emptied as a single unit.

3.2.2 Bundles of cylinders

Transportable assemblies of cylinders which are inter-connected by a manifold and held permanently and firmly together in a frame.

3.2.3 Cylinder

Transportable pressure receptacles of a capacity not exceeding 150 litres.

Road Vehicle Incident:

An unplanned event, involving a Gases Industry road vehicle, which may have resulted in product release, or may result in product release, during recovery.

Road Vehicle Accident:

An unplanned event involving a Gases Industry road vehicle (and / or its equipment) where injury has occurred to persons or animals and / or the vehicle has been damaged, and / or has left the road.

Road Vehicle Emergency:

An unplanned event where a Gases Industry vehicle (and / or its equipment) has been damaged, or is liable to be damaged and there is product release or potential product release during recovery.

Emergency Services:

Members of the Police, Fire and Ambulance services.

Duty Officer:

The “on-duty” gases industry person assigned the task of initiating the response to a road vehicle incident or accident or an emergency.

Transport Emergency Team Leader:

The gases industry person responsible, at the scene, for the management of the gas industry involvement in a Road Vehicle Transport Event

Transport Emergency Co-ordinator:

The gases industry person responsible “at base” for assisting and co-ordinating the work of the Transport Emergency Team Leader.

Vehicle Recovery:

The operation of restoring a vehicle to its normal transport position, or to a position where it can be otherwise removed from the scene, following an incident, an accident or an emergency.

Vehicle Recovery Operator:

A vehicle recovery operator who operates under hire who has specialist heavy lifting, towing and recovery equipment.

Vehicle:

In this publication, “vehicle” refers to road tankers, tank containers, MEGCs and battery vehicles and/or their tractor units.

Road Tanker:

A vehicle to which has permanently attached a vacuum insulated or insulated pressure vessel designed to carry liquefied or refrigerated gases products. This may be self propelled or pulled by a motor vehicle.

Tank Container:

An article of transport equipment with an internal volume greater than 450 litres designed to carry liquefied or refrigerated gases products and fitted with devices permitting ready handling, particularly from one mode of transport to another.

Multiple-element gas container (MEGC):

MEGCs are multimodal assemblies of cylinders, tubes or bundles of cylinders which are inter connected by a manifold and which are assembled within a framework. The MEGC includes service equipment and structural equipment necessary for the transport of gases.

Tubes:

Seamless or composite transportable pressure receptacles of a capacity exceeding 150 litres and of not more than 3000 litres.

Cryogenic Liquid:

Refrigerated liquefied gases.

Cryogenic receptacles:

Transportable thermally insulated pressure receptacles for refrigerated liquefied gases of a capacity of not more than 1000 litres.

4 Vehicles and equipment

All personnel involved in dealing with a transport emergency event should be familiar with the vehicles and equipment involved. This includes a working knowledge of the following equipment:

4.1 Tank vehicles (road tankers and tank containers)

Tank vehicles (road tankers and tank containers) are generally:

Low pressure with working pressures of 5 bar or less generally used for refrigerated liquefied gases known as “air gases” (e.g. Nitrogen).

Medium pressure with working pressures above 5 bar up to 25 bar generally used for refrigerated liquefied gases (e.g. carbon dioxide or air gases) being transferred by differential pressure or by pump.

These can be either vacuum insulated or non-vacuum insulated (e.g. a foam insulation with metal cladding).

All these tanks are equipped with a discharge system that works either by using a pump or by using a pressure build up system for discharge by differential pressure.

The appropriate Process & Instrumentation Diagram (P&ID) should be displayed on each vehicle. (See Appendix A.)

4.1.1 Vacuum insulated tank / tanker

Vacuum insulated transport tanks are double walled. They consist of an inner vessel and an outer vacuum jacket. The space between the jacket and the inner vessel (inter space) contains special insulating material, and is evacuated of air. The inner vessel is the actual pressure vessel, which contains the gas to be transported. The outer vacuum jacket is designed for an external pressure of 1 bar and connects the vessels to the vehicle chassis by means of external sub-assemblies. The inner vessel is connected to the jacket by a support system on the outside of the inner vessel with a heat reducing path and is fitted with baffle plates on the inside to reduce dynamic loads during transport. It

is designed to fulfil all the loading requirements of ADR. If the vacuum is lost, for example due to a failed jacket, the insulating material is adequate to limit the pressure rise (known as boil off) due to normal ambient temperature such that it can be vented by the tank safety valves.

In general the following are the main piping connections to the inner vessel:

- bottom line for liquid filling and withdrawal (in some cases this may be a dip tube);
- top fill line;
- vent line; and
- line from the safety devices to the top of the tank.

Other connections are for gauging and artificial pressure raising**.**

The first valve immediately after the tank on the filling/withdrawal line may be a remote controlled emergency valve that can be pneumatically or hydraulically operated. Normally the design of these valves allows the valves to be opened mechanically in emergencies.

Depending on the position of an overturned tank it is possible that gas lines can be submerged in the liquid phase and liquid lines can be in the gas phase. Additionally gauging is likely to be inaccurate.

The inner vessel is protected against over pressure by safety valves (or in older tankers or special tankers rupture discs or both). These may be set to open at the maximum working pressure of the tank or the test pressure of the tank in the case of rupture discs. In addition to the safety devices for the tank all pipework where liquid gas can be trapped is fitted with relief devices.

A blow off plate, disc or a similar device that opens if the vacuum is lost, or if the space between the jacket and the inner vessel becomes pressurised, protects the outer jacket.

4.1.2 Non-vacuum insulated tank / tanker

Non-vacuum insulated tanks are typically not used to transport refrigerated liquefied gas products with temperatures of less than –100 °C. A non-vacuum insulated transport tank consists of an inner pressure vessel, enclosed by an outer jacket. The space between the inner vessel and the outer jacket is filled with insulating material, usually closed cell polyurethane foam.

The outer jacket is normally made of thin plates of stainless steel or aluminium or fibre glass reinforced plastic. This protects the insulation against the environment and minor damage but does not form a gas tight seal.

The inner vessel is connected to the chassis by a low thermal conductivity support system and is usually fitted with baffle plates on the inside to reduce dynamic loads during transport. It is designed to fulfil all the loading requirements of ADR. If the outer jacket and parts of the insulation are damaged, the insulating material itself is adequate to limit the pressure rise (known as boil off) due to normal ambient temperature and abnormal conditions. Excess gas pressure can be relieved by the tank safety valves and rupture discs.

In general the following main connections are made to the inner vessel:

- a bottom line for liquid filling and withdrawal with a bottom valve (in some cases this may be a dip tube),
- a top fill line,
- a vent line and,
- a line from the safety devices to the top of the tank.

Additional connections are made for pressure gauging, level indication and other purposes.

The first valve immediately after the tank on the filling / withdrawal line may be a remote controlled emergency valve or a bottom valve that can be pneumatically or hydraulically operated. Normally the designs of these valves allow the valves to be opened mechanically in emergencies.

Depending on the position of an overturned tank it is possible that gas lines may be submerged in the liquid phase and liquid lines may be in the gas phase. Additionally gauging is likely to be inaccurate or obscured.

The inner vessel is protected against over pressure by safety valves (or in older tankers or special tankers rupture discs or both). These may be set to open at, or below, the maximum working pressure of the tank. In addition to the safety devices for the tank all pipework where liquid gas can be trapped is fitted with a relief device.

A blow off plate, disc or a similar device is not required to protect the outer jacket since these jackets are not gas tight.

4.2 Battery vehicles

Battery vehicles are typically used for the transport of compressed gas in high pressure cylinders, tubes or bundles.

It is typical for this type of equipment for the mass / weight of the transported product to be low in comparison to the total mass of the battery vehicle. The weight of the vehicle cannot, therefore, be substantially reduced by product removal. The discharge system of battery vehicles is simple and uses the pressure difference between the contents of cylinders / tubes and that of the static vessels / installation. The discharge coupling is typically situated at the rear of the vehicle. Battery vehicles are typically equipped with a manifold valve for each pack (isolated group) of receptacles, a main valve and a pressure indicator. In the case of toxic and / or flammable products there may also be a spring actuated emergency valve, which is usually closed during transport.

Note:

MEGCs are constructed in a similar manner to battery vehicles. The receptacles are assembled and permanently fastened within a frame, which is secured to a vehicle (or trailer) in a similar manner to a tank container.

They should therefore be treated in the same way as the equivalent type of battery vehicle concerning the hazards, whereas recovery methods may vary.

4.2.1 Battery vehicles constructed from cylinders

Battery vehicles manufactured with cylinders are assemblies of cylinders, permanently fastened together by mechanical means (known as packs). Each cylinder is connected to the other by a piping arrangement (known as a manifold) and each pack may be connected to a gallery manifold which leads to the outlet fill / discharge coupling via a main shut-off valve. In some cases there are separate couplings for filling and discharge.

The packs are permanently attached to the chassis by mechanical means such that the whole is filled, transported and emptied as a single unit.

The cylinders are combined into groups of not more than 5000 litres. Each group can be isolated by a shut-off valve.

For toxic gases each cylinder is also fitted with a valve.

The mechanical means used to attach the cylinders together and to the chassis is designed to withstand the accelerations defined in ADR and to avoid local stress concentration on the cylinder wall.

Battery vehicles of this type typically do not have safety relief devices.

The manifold system is designed according to the test pressure of the cylinders.

4.2.2 Battery vehicles constructed from tubes

Battery vehicles manufactured from tubes are assemblies of seamless tubes, each more than 150 litres but not more than 3000 litres capacity, permanently fastened together by mechanical means. The tubes can be combined into isolated groups of not more than 5000 litres.

Each tube is connected to the others by a piping arrangement (known as a manifold) and each group, if more than one, may be connected to a gallery manifold (which leads to the outlet / discharge coupling) via a shut off valve. The group(s) are permanently attached to the chassis by mechanical means such that the whole is filled, transported and emptied as a single unit.

Each group or individual tube can be isolated by a shut-off valve.

For toxic gases each tube is also fitted with a valve.

The mechanical means used to attach the tubes together and to the chassis is designed to withstand the accelerations defined in ADR and to avoid local stress concentration on the cylinder wall.

Battery vehicles of this type typically do not have safety relief devices.

The manifold system is designed according to the test pressure of the tubes.

4.2.3 Battery vehicles constructed from bundles

Battery vehicles manufactured from bundles are assemblies of bundles permanently connected to a manifold external to the bundles and permanently mounted on a chassis such that all the assemblies can be filled, transported and emptied as a single unit.

The bundles and the cylinders in a bundle are manufactured and approved according the requirements for bundles / cylinders for individual use.

Each bundle is fitted with a shut off valve and can be isolated.

For toxic gases each cylinder of the bundle is fitted with a shut off valve.

The mounting system is designed to withstand the accelerations defined in ADR. The mechanical means employed to permanently secure the bundle to the chassis is such that movement in relation to the chassis is avoided.

Battery vehicles of this type typically do not have safety relief devices.

The manifold system is designed according to the test pressure of the cylinders.

4.3 Weight of the vehicle / equipment and product

Maximum vehicle gross weights will vary according to the regulations of each particular country. The actual vehicle weight (including equipment) will depend on the design and construction of the vehicle and the product carried.

Maximum vehicle gross weights are shown on plate(s) attached to the vehicle and in the vehicle documentation.

4.4 Design, construction and general arrangement drawings

The design will depend on the individual gas company requirements and the manufacturer of the vehicle. Vehicles may vary in the way they are constructed, but the principles are usually the same. A typical illustration of a tanker cross section is given in Appendix B. Photographs of typical road transport equipment are shown in Appendix C, and a typical Process and Instrumentation Diagram (P&ID) is shown in Appendix A.

4.5 Design and construction details of pipework / manifolding arrangement

Transport equipment for refrigerated liquid gases usually has pipework constructed from either stainless steel or high purity copper.

Transport equipment for compressed gases will usually have pipework constructed from stainless steel, high purity copper or copper alloy.

All pipework is designed for the temperature and pressure ranges expected from the product and atmospheric conditions.

4.6 Contents and pressure gauges

Pressure gauges indicate the vessel pressure. In the case of transport equipment for compressed gases the pressure gauge indicates the quantity of gas carried. In the case of vehicles for refrigerated liquid gases a specific contents gauge indicates the amount of product. Other gauges are used for indicating pressures concerning the discharge system.

Warning

> Following a accident/incident all gauges should be considered as being suspect and shall not be relied upon to provide accurate information as to the pressure and / or contents. Whilst pressure gauges can provide some indication as to pressure, contents gauges will never operate properly unless the tank is in an upright, or near upright, position and the gauges are undamaged.

4.7 Safety devices

4.7.1 Safety relief valves

These devices protect the tank and / or pipework from excessive pressure which could cause rupture.

These valves are spring loaded and will typically release pressure to the atmosphere.

Tank relief valves will start to open at their set pressure and be fully open at 110% of this set pressure. When the pressure reduces to below 90% the valves will re-seat.

During vehicle emergencies particular care shall be taken to avoid injury or equipment damage due to escaping product when these valves open unexpectedly.

> **Warning** When the vehicle is in a non-upright position the risk is greater since there is a likelihood that these relief devices may vent liquid and the discharge may be directed towards personnel working in the area.

4.7.2 Burst discs

Burst discs protect the vessel and / or pipework from excessive pressure.

Bursts discs have the following characteristics:

- They are specially manufactured single operation metal foil discs designed to rupture at a set pressure.

- When burst discs rupture the sudden noise generated can startle individuals in the vicinity.
- They do not re-seat following rupture and cannot be replaced whilst venting is taking place.
- installations CAN be fitted with a change-over system which will allow isolation of the failed disc. This will allow emergency replacement of the failed disc.

4.7.3 Emergency valves and emergency shut-off controls

Emergency valves are designed to prevent unintended loss of product in case of failure of other pipework components, or in case of an incident during filling or discharge. They normally require pressure (pneumatic or hydraulic) to open but are closed by spring pressure. During transport they are normally closed.

If required, and depending on the design, they can be opened using one of the following techniques:

- application of air / hydraulics from the vehicle;
- application of air / hydraulics from another vehicle;
- application of air from a foot pump;
- application of hydraulic fluid using a pump and reservoir;
- application of an inert gas from a cylinder through a pressure regulator; and
- using the mechanical wind-off device incorporated within the valve, if fitted.

  Warning Care should be taken not to exceed the design pressure of the valve actuator as this may cause damage to the equipment.

In normal operation these valves are opened and closed by controls at the road transport equipment control cabinet. Additional remote controls mounted on the sides of the road transport equipment which allow emergency shut-off operation of the valve(s) may be installed. These remote controls shall be reset after activation to allow the valve(s) to be re-opened when it is again safe to do so.

4.7.4 Vacuum safety devices

A safety device is fitted to protect the outer jacket from bursting and / or the inner vessel from collapse should product leak into the vacuum interspace.

These devices can be one of the following:

- blow-off plate secured on the jacket (e.g. by springs) ;
- blow-out plug positioned in the vacuum line.;
- bursting disc.

In all cases there is no significant hazard from their operation. Plates and plugs shall be secured.

4.7.5 Anti-tow-away

Many gases companies fit an automatic safety device which prevents movement of the vehicle when one or more of the following occur:

- A product transfer and / or vent hose is connected to the road transport equipment pipework coupling.

- The road transport equipment control cabinet doors are open.

These devices typically operate by preventing the brakes from being released ,EIGA Doc 63 *Prevention of Tow-Aaway Incidents* [3] for further information.

In addition, some vehicles are equipped with a warning system (e.g. light and / or buzzer) located in the driver's cab.

4.8 Product fill and discharge couplings

Some vehicles are fitted with hoses which are permanently connected by means of bolted flanged joints. Others have hoses which are removed during transport. In these cases the hoses are only connected during product transfer.

Couplings are product specific in order to minimise the risk of incorrect product being transferred. They are typically standardized for the filling lines using EIGA couplings, see EIGA Doc 909 *EIGA Cryogenic Gases Couplings for Tanker Filling* [7]. For the discharge lines,company specific couplings are generally used.

Specific tools can be required to connect and disconnect these couplings. Spark proof tools are required for flammable products. These tools are usually carried on the vehicle and should be handled with care.

Specific coupling equipment may be used by some gases companies and carried with their transport emergency equipment for the purpose of controlled emergency product transfer at the scene of an incident.

If such product transfer is necessary then care shall be taken to ensure that:

- the receiving tanker is returned to required purity before re-use;
- any specific coupling equipment isreturned to the emergency team; and
- no unauthorised adapters become available for general use.

4.9 Tractor/trailer connection

Tractor/trailer couplings are standardised throughout most of the industry. However, there can be country specific variations. This could require specialist recovery vehicles.

5 Priorities

When preparing transport emergency plans (see also chapter 6) and when dealing with any transport emergency event there are a number of aspects to be considered, and include, but are not limited to:

5.1 Safety of individuals

At a transport emergency event it is likely there will be individual in the vicinity, and there safety is a priority. Individuals involved can include:

- those living in the local area;
- the driver(s) involved;
- any passers-by;
- any other individual(s) involved; and
- those attending to assist.

5.2 Animals

Consideration should be given to any animals that may be in the vicinity of a transport emergency event, these can include:

- domestic animals;
- wild animals; and
- farm animals if a vehicle has crossed into farmland.

5.3 Prevention of escalation of the transport emergency event

It is essential that a transport emergency event does not escalate beyond the original event. Precautions to ensure that this does not happen include, but are not limited to:

- preservation of tanker or battery vehicle integrity;
- prevention of product release;
- prevention of fire; and
- product handling to ensure the product is:
    - retained
    - safely disposed of; or
    - transferred to another vehicle.

5.4 Prevention of impact on surrondings

A transport emergency event can lead to environmental damage, and these can include the following:

- Reopening of closed road(s), if closed;
- Minimising disruption to others;
- Inconvenience to other road users;
- Other services, for example trains, electrical supplies; and
- People in proximity.

5.5 Publicity unfavourable to the industrial gases industry

A transport emergency event can lead to unfavourable publicity to the industrial gases industry. It is important that following a transport emergency event that companies manage communication. Guidance includes:

- all reports shall be factual;
- professionalism when dealing with the media. (See Appendix D)

5.6 Legal aspects

Following a transport emergency event, there is a possibility of criminal of civil action being taken against companies and/or individuals. Member companies need to be aware of:

- potential claims; and
- prosecution.

Due to the above it is important that evidence is preserved, and events recorded in detail, such as diary log of event.

5.7 Cost of the transport emergency event

A transport emergency event can have many costs associated with it, both financial and others. These include but are limited to:

- impact on humans, which can include;
  - fatality;
  - injury; and
  - compensation.
- damage to vehicle;
- damage to third party vehicle(s)/property;
- Claims;
- customer supply failure; and
- investigation and reports.

6 Transport emergency plan

A transport emergency event can occur anywhere, and at any time.

It is the responsibility of every company that transports gases to have emergency plan arrangements in place, which can cater for an emergency at any time. These companies shall also ensure that there are transport emergency plans in place which can cater for all transported products and geographical areas. These can include plans for assistance to or from other companies.

The purpose of any transport emergency plan is to ensure that all employees responsible for the transport of gases understand their responsibilities and actions to be taken with respect to a transport emergency event.

The plan should include all transport emergency events involving vehicles within the scope of this publication owned by or transporting gas products on behalf of a gases company, regardless of location, type of vehicle or product carried.

All managers responsible for transport and other personnel who may be required to assist following a transport emergency event are therefore included.

Each company shall have procedures in place for the personnel responsible for dealing with any road transport incident and clear action plans for these personnel to follow.

Failure to provide such a plan in advance can result in procedures having to be developed by personnel who, due to the on-going emergency, could be under considerable stress and pressure. This could lead to personnel not thinking and acting as logically and coherently as they would otherwise, and this could lead to decisions and actions being taken which are undesirable.

The transport emergency plan should include as a minimum the following:

- personnel who will be dealing the transport emergency event;
- equipment for the transport emergency event;
- communications planning, including:
  - internal;
  - external; and
  - media.
- responsibilities;
- training;
- practical exercises and tests of the plan and people involved;
- ongoing contact with:
  - other internal personnel;
  - personnel from other gas companies;
  - commercial vehicle recovery operators; and
  - emergency services
- authority levels.

7 Contact list

Each company which transports gases shall ensure that sufficient competent personnel are always readily available to deal with a transport emergency event.

It is critical to the success of any transport emergency event response that the correct persons / organisations are contacted whenever required. Consequently it is important that a specific first-contact information form is provided to accurately and consistently record the incoming information, see Appendix E for a typical example.

Each company should ensure that sufficient and appropriate personnel who could be required to attend or assist remotely in a transport emergency event are contactable. They should ensure that these personnel can respond as required.

One or more persons, depending on geographical area or specific product, should be nominated at all times as being the duty officer. They may be responsible for being the focal point for all communication and actions during any transport emergency event during their duty period or until relieved by another nominated employee. Personnel responsible for transport at each gas industry location should consider which personnel could be a duty officer, transport emergency team leaders, transport emergency co-ordinators, and which personnel should be on their transport emergency event contact list.

The contact list may include the following:

- All gases industry and haulier personnel who could be involved including their availability and their responsibilities;
- Other contact telephone numbers required including, but not limited to:

- o emergency services general numbers;
- o hospitals;
- o commercial vehicle recovery operators;
- o commercial vehicle service agents;
- o crane hire companies;
- o any air transport or ferry companies who may be used to transport expert personnel in an emergency; and
- o appropriate regulatory agencies

- All appropriate gases industry offices, head office for the particular geography and all other Gases industry offices/branches, and all the personnel on their transport emergency event contact lists.
  - These include management teams, transport staff, media experts, vehicle engineering teams, safety staff, etc.
- The responsible person(s) of the haulier(s).

The personnel responsible for distribution activities at each location shall ensure that these contact lists are kept up to date and controlled. This should include all persons/organisations involved in the communications flow chart, see Appendix F for an example, and the following:

- internal gas company contacts;
- emergency services;
- mutual aid contacts; and
- heavy vehicle recovery contractors.

8 Transport emergency event equipment

The following should be made available:

- Appropriate Personal Protection Equipment to drivers as specified in the Instructions in Writing as being required by the driver or vehicle crew in an emergency.
- Equipment to enable the transport emergency event team to carry out rectification work and off load/dispose of the product. This may be carried in a transport emergency event trailer.

For a list of suggested equipment and an example of a typical transport emergency event trailer see Appendix G.

9 Communication flow chart

In any transport emergency event good communication is essential.

A carefully prepared communication flow chart will minimise the possibility of any errors or omissions.

This flow chart should indicate the chronological order of communication with all appropriate personnel / agencies. See Appendix F for example of a communication flow chart).

10 Concerns / actions by transport emergency team leader

10.1 Prior to arrival at the transport emergency event

Prior to leaving for the transport emergency event the transport emergency it is recommended that the team leader should consider what is likely to be required on arrival. These include:

- PPE availability;
- Ensure all appropriate tools are available;
- Arrange police escort if necessary;
- Ensure other actions required of the transport emergency plan are being addressed; and
- Notify transport emergency co-ordinator that he is leaving for the scene, giving his contact number. The transport emergency co-ordinator should then advise the emergency services Officer in Charge of his estimated time of arrival, contact number and vehicle registration.

10.2 On arrival at the transport emergency event

The transport emergency team leader is the main representative of the gas company at the scene of the transport emergency event.

The actions required following any transport emergency event will vary considerably depending on the individual circumstances of the event. The following list is a generic summary of the main aspects to be considered (in recommended order) by the transport emergency team leader at the scene of the transport emergency event.

The suggested order is:

1. Identify himself to the Officer in Charge at the scene of the transport emergency event;
2. Check that appropriate personal protective equipment is used by all concerned;
3. Check that any injured persons have been cared for;
4. Liaise with Officer in Charge to ensure safety of all persons in proximity of the transport emergency event;
5. Assess the situation, for example:-
    - product(s) involved;
    - quantity;
    - pressure; and
    - condition of road transport equipment.
6. Provide guidance to ensure no further escalation of the transport emergency event;
7. Recommend the preferred method of recovery;
8. Communicate and agree proposed plan with emergency services Officer in Charge at transport emergency event scene;
9. Arrange appropriate resources, this will include defining and arranging assistance;

10 Communicate with, and advise vehicle recovery team leader;

11 Arrange for continuity of attendance by gases industry personnel at transport emergency event scene;

12 Advise on environmental protection; and

13 Risk assessment (see also chapter 12).

Throughout the above, the gases industry transport emergency team leader at the scene of the transport emergency event, shall ensure that all their team, including the gases industry transport emergency co-ordinator (who will not be at the scene), are kept fully updated on all actions, proposed actions and changes in circumstances at all times.

The transport emergency co-ordinator shall, in turn, ensure that all appropriate personnel not at the scene are also kept fully up to date with the circumstances as they change.

In addition, they should contact and notify a trained representative from the gas company to be responsible for all communication with the media, See Appendix D.

11 Recovery methods

11.1 Choice of recovery method

Depending on the circumstances of the transport emergency event, the vehicle type and severity of any damage many different solutions may be available.

Where possible the recovery method selected should minimise the forces exerted on the vehicle to be recovered in order to reduce/prevent any additional damage and the risk of product release. By ensuring that the vehicle to be recovered always maintains reasonably firm contact with the ground, for example aa pivot point , see Appendix H, this could be achievable.

It should be possible to reduce the capacity of the recovery equipment if the forces exerted during recovery are kept to a minimum. This will generally provide the dual advantage of ease / speed of availability and lower cost of the equipment.

Where tanker vehicles are concerned, the forces can be minimised if the product is removed from the vehicle (see 12.4. Product Handling).

11.2 Use of cranes or recovery vehicles

The choice of whether to use cranes or recovery vehicles (with or without airbags) will be determined by several factors.

11.2.1 Availability of equipment / resource

- Acceptability of delays;
  - There can be situations where the preferred equipment for recovery is not available without an unacceptable delay. The emergency team leader shall liaise with the “Officer in Charge” to consider whether second choice equipment is acceptable for the transport emergency event.
- Local geography / ground strength;
- The emergency team leader should decide whether there is sufficient space/area and condition of the ground surface, for example, ice and mud for the method of recovery selected. Cranes require firm surfaces for stability.

11.2.2 Type of vehicle

Cranes or specialist recovery vehicles, (preferably with airbags) can be used depending on availability and type and location of incident.

11.3 Where to fix slings / chains / airbags / straps

In order to minimise the damage to any road equipment it is necessary to obtain the maximum leverage. Utilising the maximum surface area of the tank / tanker barrel (jacket) or equivalent for battery vehicles achieves this. This serves to minimise the pressure/force on any individual part of the vehicle and provides the longest lever.

The strongest points on any tanker or battery vehicle are at the positions of maximum stress during normal road operation. These are associated with:

- running gear;
- landing legs; and
- king pin.

Any slings / chains / airbags used for recovery should be positioned / attached in these areas. In some cases, these areas can be indicated on the vehicle or vessel.

Tie down points fitted for the purposes of securing during sea journeys are not lifting eyes and should not be used as anchorage points for lifting as they are not designed to withstand forces during recovery.

Safety considerations include, but are not limited to:-

- In the case of flammable and / or oxidising products, consideration should be given to conducting atmospheric tests before any other actions are undertaken. The tanks / tanker / battery vehicle should be earthed during recovery. Spark-proof tools and other equipment could be required depending upon the condition of the vehicle and product..
- In the case of toxic products there is a need for toxic gas monitors to be used to identify any leakage of toxic gas. Breathing apparatus could be required should any toxic gas leakage be detected.
- A thorough understanding of the nature of the danger and hazards of the product is essential, as is competence in the use of the monitor and breathing apparatus.
- Where uncontrolled product release could cause escalation of the transport emergency event and is considered a possibility the product shall be removed in a controlled manner if possible. Product transfer and / or controlled release / venting can accomplish this.
- In the case of flammable products a risk analysis should be done to decide if purging of the road transport equipment with nitrogen, preferably dry, is required as it may improve safety during recovery.
- The emergency services shall be advised to avoid spraying water on to refrigerated liquid tanker vehicles during recovery as this could freeze safety devices or other essential equipment. In addition, the ground surface could become difficult for recovery.
- Steel wire cables, rope or chains should not be used for tank recovery unless the load is spread across the tanker surface using wooden timbers to avoid damage to the vehicle and potential leaks .

- If the vehicle is severely damaged and the recommended recovery method is not practicable the best alternative recovery method should be selected.

11.3.1 Vacuum insulated tank / tanker

Due to the type of construction, these tankers have particularly strong outer vessels (jackets). The straps / airbags may be positioned as above with the minimum risk of damage. Ideally wide webbing straps (at least 250 mm) should be used with airbags. Where it is not possible to use airbags because of the non-availability or because of the nature of the ground at the transport emergency event area then recovery by rolling the vehicle using webbing straps is preferred. Only when neither of these options is suitable for the transport emergency event should alternatives be considered.

The following points should also be considered:

- Contents gauges for this type of tank/tanker are usually of the differential pressure type and will not operate correctly if the tank/tanker is on its side or overturned;

- Pressure and / or contents gauges can be isolated during road transport;

- Pressure and contents gauges can be damaged during a transport emergency event; and

- During a transport emergency event, safety devices can have become damaged or their outlets could have become blocked.

11.3.2 Non-vacuum insulated tank / tanker

These tanks/tankers are not vacuum insulated, but all the main recovery aspects concerning vacuum insulated tanks/tankers in 12.3.1. remain appropriate. However, there are a number of differences with these tanks/tankers, the major differences being:

- The outer jacket is only a weather covering to protect the insulation and has very little structural rigidity;

- The insulation can be easily damaged if the protective jacket becomes ruptured or deformed. This deformation can take the form of compression of the jacket and insulation;

- These tanks / tankers generally transport products at higher pressures than vacuum insulated tanks / tankers. This higher pressure gives rise to additional hazards should there be any product leakage during recovery;

- Many contents gauges on these tankers are mechanical and therefore their operation shall be considered suspect following a transport emergency event; and

- During a transport emergency event, safety devices could have become damaged or their outlets could have become blocked.

11.3.3 Battery vehicles constructed from tubes

All the main recovery aspects concerning vacuum insulated tanks / tankers in 12.3.1. apply, except that the vehicle is constructed with a number of large tubes rather than a single double walled tank. The following points additional points should be need to be considered:

- Nature of the product. (see section 4);

- Products will be compressed gas;

- The tubes (typically made of steel) are secured together either by strapping to the chassis or held between bulkheads. In both cases the assembly of tubes should be used as the tank of a tanker, but care shall be taken to ensure that the tubes are secure prior to and during

recovery. If there is any sign of movement of the tubes then these shall be secured or removed before the recovery operation;

- Specific consideration shall be given in case of composite tubes.
- The tubes shall not be used as recovery anchorage points;
- The individual tubes are manifolded together, usually at the rear of the vehicle, and protected within a cabinet or frame. Regardless of protection this manifold area is the most vulnerable area during recovery;
- The pressure can be considerably higher than for tanks/tankers (up to 300 bar or more at 15°C);
- The manifold valves will be closed during road transportation;
- The manifold could be under full trailer pressure; and
- The pressure gauge may not be indicating the pressure in the manifold or tubes.

Before recovery:

- where fitted, individual tube valves should be closed;
- manifolds should be de-pressurised;
- all manifold valves should be closed;

11.3.4 Battery vehicles constructed from cylinders

These vehicles present a different recovery problem in comparison to battery vehicles constructed from tubes. The cylinders are manifolded together in individual packs (or banks), and these packs do not usually contribute as much structural rigidity as do tanks / tankers or the tubes of battery vehicles constructed from tubes.

These vehicles generally carry significantly more individual receptacles (cylinders) than the tube trailers. Because there are significantly more receptacles (cylinders) and packs there are more manifolds.

The following points should be considered:

- Care shall be taken when positioning straps or chains to avoid damage to the manifolds as these areas are the most vulnerable on the vehicle;
- As these manifolds are generally the most vulnerable areas, care shall be taken during recovery operations and if straps move or when there is sudden movement;
- The chassis of the battery vehicle and its main automotive components, for example, spring hanger brackets should be considered to be the preferred positions for securing chains or straps; and
- The cylinders shall not be used as recovery anchorage points.

Before recovery:

- where fitted, individual cylinder valves should be closed;
- manifolds should be de-pressurised; and

- all manifold valves should be closed.

11.3.5 Battery vehicles constructed from bundles of cylinders

Battery vehicles constructed from bundles of cylinders should be treated in a similar manner to battery vehicles constructed from cylinders (see 12.3.4.), but the following differences shall be understood:

- the method of securing the cylinders within the bundles is likely to be the weakest of the securing mechanisms and so the cylinders could have moved within the bundles;
- the bundles of cylinders could have moved from their original position;
- bundles of cylinders could have been weakened by deformation;
- the manifolds could have distorted or broken; and
- bundles of cylinders shall not be used as recovery anchorage points, except when they are being removed from the vehicle.

Before recovery:

- where fitted, individual cylinder valves should be closed;
- manifolds should be de-pressurised;and
- all manifold valves should be closed.

11.4 Product handling

Before product handling, any hoses, or other equipment used, for example, pumps shall be clean and compatible with the product. If hoses are to be connected together they shall be connected in a manner which prevents separation and leakage. Hoses connected together should also be secured so that inadvertent movement of the hoses is reduced.

There may be alternative methods of dealing with the product in the vehicle.

These are:

- retain;
- dispose; or
- transfer.

There are specific hazards including vapour clouds, toxicity and fire associated with product handling which need to be understood. These are described in Appendices K, L and M.

The following outlines possible options and their respective advantages and disadvantages.

11.4.1 Product retention

This is the simplest, and often the safest, method of product handling. Where the weight of the product is minimal in comparison to the overall vehicle weight and there is no damage to the product containment equipment this should be the preferred method.

Product retention has the advantages of:

- speed;

- safety, by not requiring handling the product in an non-standard manner; and
- complete recovery of the product from the accident/transport emergency event scene to the gases industry location where it can be safely managed.

However, the following problems can be encountered:

- the condition of the vehicle and its associated equipment, such as tank, cylinders, tubes, and manifolds;
- higher weight of the vehicle to be recovered, which can result in the necessity to use higher capacity recovery equipment;
- possible instability due to sudden movement of the load during recovery;
    - particularly movement of liquid
- possibility of pressure increase which could cause product venting through rupture discs or safety valves during recovery; and,
- possibility of unexpected product release.

If the tanker is on a slope such that all of its outlet connections are in the gas phase there may be no option other than to initially retain the product. In this case, it could be possible to plan the recovery in stages. During certain of these planned stages some product may be removed from the vehicle. For example, part-recovery could be possible using air-bags, after which it could be possible to remove some product, before full recovery using cranes.

Warning: Never attempt, or allow, liquid to be transferred during a lifting or recovery operation.

11.4.2 Product disposal

The majority of the volume of gases industry products (e.g. “air gases”) transported by road do not cause environmental damage. These products therefore have the advantage that they can generally be released to the atmosphere without risk of environmental damage.

If the product, or at least a significant proportion of the product, shall be removed before vehicle recovery then there are two remaining options – product disposal and product transfer.

Product disposal is often the safest method of product handling, particularly if the tanker involved has been damaged.

Product disposal has the following advantages over product transfer:

Speed

- No delay whilst second tanker is organised.
- Product disposal rates can be much greater than product transfer rates but will vary depending on whether it is decided to release gaseous or liquid product.
- Releasing liquid product is usually the faster of the two options. However, this may create other problems such as pools of cryogenic liquid, serious lack of visibility due to vapour clouds, and local atmospheres which may be seriously oxygen enriched or oxygen deficient, flammable, toxic, or a combination of two or more of the above.

Simplicity of operation

- There is no requirement to raise pressure in the tanker to be recovered, nor to lower pressure in the receiving tanker.
- A second tanker is not required to be parked close to the first tanker to enable product transfer to be undertaken.

Safety

By disposal, rather than transferring, any dangers associated with mixing products can be reduced.

This may, however, cause other localised problems such as the following:

- extreme cold, which may be sufficient to cause personal injury and / or damage to property, equipment or even surrounding ground surface;
- reduced visibility due to vapour clouds (see Appendix I);
- the risk of fire (see Appendix J)
  - oxygen and asphalt or hydrogen and electrostatic charges, etc.
- the atmosphere in the local area may become oxygen enriched;
  - this will give rise to a significantly higher fire risk.
- the atmosphere in the local area may become oxygen deficient
  - this may be such that asphyxiation becomes a risk.

Other gases within scope of this document may have different hazards associated with them. These hazards may be one, or more, of the following:

- toxicity, possibly with a corrosive subsidiary risk(see Appendix K);
- flammability.

When dealing with these products other factors shall be considered. These include the following:

- can controlled release be undertaken safely?
- will the released product disperse safely?
- is s breathing apparatus required for all personnel in the local area?
- is specific equipment necessary and available (e.g. vent or flare stack?)

In all cases, the probable path(s) of any released products shall be considered:

- what area will be affected (e.g. type of soil, risk of combustible materials)?
- will the released product gather in an area which might give rise to a problem? (e.g. pits or hollows)
- what effect(s) will the released product create? (e.g. extreme cold, vapour clouds, etc.)

- are there any potential ignition sources? (e.g. contact with a hot point, an electrical spark or an electrostatic discharge)

Venting flammable gases should be done using specific and specially designed venting equipment. For some gases or in some circumstances a specially designed burning system may be required.

The need to stop, or pause, any product disposal before complete discharge should be considered.

- Can this controlled release be safely stopped?
  - If not, should it be started?

The method(s) of product disposal will vary depending on the product and type of equipment involved, but the following safety considerations shall always be assessed.

- Which vessel outlet valve(s) are currently open to the vessel's vapour phase?
- Which vessel outlet valve(s) are currently open to the vessel's liquid phase?
- Do I require to use a hose for disposal?
  - If so is it securely attached to the tanker coupling?
  - If more than one hose is required are they securely connected to each other?
  - Have I taken precautions to prevent hose whip?
- Do I require to use a portable vent/flare stack?
  - Is the use of a flare stack required/helpful, for example for hydrogen?
  - What is the wind direction?
  - In the case of flammable gases heavier than air should I consider igniting the escaping gas using the dedicated flare stack to prevent it collecting in pits and hollows?
- Am I under a time constraint?
  - What is the best method of disposal given the above time constraint?
- What is the indicated pressure of the product to be disposed of?
  - Is this indicated pressure reliable?
  - If not, should I make alternative arrangements?
- Will my decisions, actions and recommendations adversely effect:
  - Any people?
  - Any property or equipment?
- Has anything changed since I last considered the above?

11.4.3 Product transfer

Product transfer to another tanker has a few advantages over product disposal. The most important of these are:

- Little, or no, escape of product to the atmosphere.
  - This has the advantage of reducing any risks posed when product is deliberately released to the atmosphere. (e.g. asphyxiant or flammable gas in the environment)
- Minimal product loss.
  - The retained product, however, may have lost purity and so, for commercial reasons, may have to be disposed of in a controlled manner elsewhere.

One important, though easily overlooked, factor which shall be considered when transferring liquid oxygen or other oxidising gases is the condition of the receiving tanker.

- As a general principle, the “empty” tanker (vessel) and its transfer equipment which is to receive the product from the vehicle to be recovered should be in service carrying the same product. If this is not possible then dumping the product from the vehicle to be recovered may be the best option.
- Ensure that the tanker (and transfer equipment) into which the oxidising gas is to be transferred is clean and prepared for service with that product.

Note:

A tanker (vessel) and its transfer equipment in oxidising gas use should not be used for receiving non oxidising products in case these have become contaminated with hydrocarbons.

Additionally, the safe working pressure of both tanks/tankers shall be considered. Tanks / tankers may have vastly differing working pressures. Great care shall be taken when transferring (either by pressure decant or pump) product at high pressure into a lower pressure tank / tanker.

Product transfer can be undertaken by utilising one of the following methods:

- Pressure decanting
- On-board pump transfer
- External pump transfer

11.4.3.1 Pressure Decanting

The pressure decant technique is the simplest and most practical of all possible product transfer techniques. (It is also the only practical technique possible if the product is a compressed gas, but it shall be very clearly understood that only a balancing of pressures can be achieved.)
The maximum allowable working pressure of the receiving tank/receptacle should be the same or higher than the one of the vehicle which is being recovered. If this is not the case, a specific risk assessment shall be done.

For liquid gases this technique may require a number of hoses to be connected together and one end connected to a connection **which is in the liquid phase** of the tanker to be recovered, and the other to the standard tanker filling connection on the receiving tanker.

- The total length of hose used should be as short as possible.
- The hose(s) used should have the largest internal diameter possible.

The pressure in the tanker to be recovered should be raised, if possible, by use of the normal pressure raising coil.

11.4.3.2 On-board pump transfer

It may be possible to use the pump transfer system on the tanker to be recovered to transfer product to the receiving tanker, but, there may be a number of possible problems; which will prevent its use.

Such problems and possible solutions are detailed below:

Problem	Possible Practical Solution
Pump suction not in liquid phase	No practical solution (unless the tanker can be turned)
Power to pump motor not available	Use power from another vehicle
Pump will not prime	Raise pressure in tanker

This method of product transfer is really only practical in situations where the tanker to be recovered is in a predominantly upright orientation, and the product system equipment is mechanically undamaged.

11.4.3.3 External pump transfer

It may be possible to use an external pump (e.g. on the receiving tanker) to withdraw product out of the tanker to be recovered.

Where it is possible to utilise this technique there are a number of advantages, but there are many cases where it will be impossible to use this technique. For example, it will not be possible to use this technique if:

- the suction line of the pump to be used cannot be connected to the transfer hose;
- the transfer hose cannot be connected to a connection in the liquid phase of the tanker to be recovered; or,
- the total length of the hose feeding the pump is such that the heat in-leak lead to gas locks in the hose or cavitation of the pump.
- sufficient pressure cannot be provided in the tanker to be recovered to produce adequate pressure at the pump inlet.

In general, this technique has very limited availability in situations involving cryogenic liquids.

12 Dynamic risk assessment

By their very nature transport emergency events are unplanned and are outside the scope of normal vehicle / equipment operation.

They are therefore potentially the most hazardous events that may be encountered.

Carrying out regular risk assessments should ensure that no unexpected hazards arise during the recovery operation.

Ideally, though not necessarily, written notes should be kept of these on-going risk assessments throughout the recovery.

These risk assessments shall be dynamic (i.e. frequently repeated) and updated every time circumstances change. They should cover all the aspects detailed above and the following additional items:

- Appropriate personal protective equipment.
- Potential damage to surrounding areas by product spillage (e.g. metal embrittlement, permafrost damage to sewers, watercourses, drains, and underground services).
- Potential damage to underground and / or overhead services by recovery equipment employed.
- Potential damage to roadways and / or buildings / structures.
- Possible sudden unexpected movement of the vehicle being recovered caused by product shift (see also 12.4.1).

- Possible slippage of recovery equipment during recovery, particularly, when conditions are below zero degrees °C (cold climatic conditions or liquid spillage).
- Potential catastrophic damage to recovery equipment (chains or straps) due to extreme cold temperature
- Potential failure of safety relief devices (e.g. damaged, blocked, frozen)
- Potential escape of product through safety relief devices (see also 5.6 and 12.3.1).
  Remember: In normal operation the tail pipe outlets from the safety devices are orientated to ensure that escaping product does not cause injury or damage. In a transport emergency event these tail pipe outlets may be orientated such that escaping product (which may be in liquid form) may be directed towards personnel or critical equipment.
- If undamaged during the transport emergency event the relevant pressure gauge(s) on the gases industry equipment covered by the scope of this document should provide a good indication of the approximate pressure in the road transport equipment. The risk assessments should take due account of the pressure, and any pressure change as knowledge of this information may be invaluable during, and immediately after, the recovery operation. (Contents gauges on tankers only operate when the vehicle is in the normal orientation.) (see also 12.3.1)
- Consideration shall be given to reducing the contents of the vehicle to minimise;
  - the overall weight of the vehicle to be recovered;
  - the dangers associated with product movement;
  - the dangers associated with product leakage (particularly with toxic and flammable gases)
- Methods of transporting the damaged vehicle to a suitable location where it can be inspected, emptied, purged risk free, and eventually repaired or disposed of.
- **Has anything changed since I last considered the above?**

13 Post transport emergency event actions

For additional information, check EIGA TS 06 – Vehicle incident investigation management [X]

13.1 Post transport emergency event checks

Post transport emergency event checks may be required by:

- Police
- Local government transport agency
- Local authority
- The gases company which operated and / or owns the vehicle.
- Any contractor involved
- Insurance companies with a vested interest

13.2 Return of vehicle to base or work shop

Arrangements shall be made to return the vehicle to its home base or location selected by the gas company involved. If the location selected is not a gases company site then particular care should be taken to ensure that no unauthorised persons are allowed near the vehicle.

Due to the likelihood that any remaining product may have lost purity it should be disposed of according to local procedures.

Note:

The local authorities can require the vehicle to be quarantined pending an enquiry. In such a case the vehicle will be directed to a designated location. The authorities should be informed in writing of all risks associated with the product and equipment, and the precautions to be taken.

13.3 Driver Interviews

The driver of the vehicle (and any other available witnesses) should be interviewed as soon as possible following the incident. He should be subsequently interviewed again, as soon as practical, but

after the initial shock of the incident has receded. In both cases the timing and location of these interviews, or de-briefs, may be dependent on any injuries sustained by the driver.

The following points should be considered when conducting an interview:

- Introduce yourself fully (name, job title, etc.)
- Explain the intention of the interview
- Stress that you want to prevent another accident
- Record the person's name and address
- Explain what questions you are going to ask
- Emphasise that you are trying to determine the cause of the accident, **not** to find a scapegoat
- Start with general questions, before gradually asking more specific and detailed questions
- Base any questions on known facts and observation, do not make quick conclusions
- Do not force the witness into making "yes/no" answers
- Do not use difficult or foreign terms
- Do not refer to statements made by other witnesses

In all interviews ensure that the questions asked are relevant to the aim of the investigation.

Full details should be obtained which should cover the period immediately prior to the incident and the events for the previous 7 days.

"Hot" interviews should only be conducted if the driver is capable of being interviewed. Cold" interviews may need to be repeated.

13.4 Post transport emergency event review

A person should be appointed who shall be responsible for conducting a post incident review to ensure that any learning points are highlighted:

- To prevent recurrence of such an event
- To use in a critical review of the Transport Emergency Plan.

In relation to the cause(s) of the transport emergency event there may be changes required concerning:

- the procedures used in the driver's work activity
- the driver training
- the working conditions of the driver
- the behaviour of the driver during his working activity
- the techniques, and equipment used
- any other element which may have contributed to the accident.

With regard to the Transport Emergency Plan the following should be considered:

- the communication network
- the actions taken
- the techniques employed
- the equipment available and / or required

- the behaviour of the personnel involved.

13.5 Training

All personnel who could be required to become involved with road transport incidents/accidents/emergencies shall be suitably trained, and retrained as appropriate, and have proven their competence through practical and theoretical tests. Records of training and tests shall be retained.

This document should be used as a guideline for those involved.

13.6 Safety

Due to the unplanned nature of any transport emergency event safety shall be given the highest priority.

Regardless of the type of transport emergency event all personnel shall be made aware of the dangers of passing traffic. Particular consideration should be given when working on or near the hard shoulder of a motorway.

Use the information which can be found on the transport documents, Instructions in Writing and Safey Data Sheet of the product.

Such information relates to:

- nature and characteristics of the product
- nature of the hazard(s)
- PPE for the vehicle crew
- Emergency Actions (“Do’s” and “Do Not’s”)
- advice on :
  - First Aid
  - Fire
  - Spillage
- the Emergency Contact Telephone Number.

In particular, the dangers associated with working in or near vapour clouds shall be understood.

The procedure to be followed in the event of any individual receiving cold burns or exposure to toxic gas shall also be understood.

14 References

Unless otherwise specified, the latest edition shall apply.

[1] EIGA Doc 30 *Disposal of Gases* www.eiga.eu

[2] EIGA Doc 44 *Hazards of Oxygen-Deficient Atmospheres* www.eiga.eu

[3] EIGA Doc 63 *Prevention of Tow-Away Incidents* www.eiga.eu

[4] EIGA Doc 80 *Handling Gas Container Emergencies* www.eiga.eu

[5] EIGA Doc 130 *Principles for the Safe Handling and Distribution of Highly Toxic Gases and Mixtures* www.eiga.eu

[6] EIGA Doc 136 *Selection of Personal Protective Equipment* www.eiga.eu

[7] EIGA Doc 909 *EIGA Cryogenic Gases Couplings for Tanker Filling* www.eiga.eu

Appendix A – Example of a Process and Instrumentation Diagram for a Vacuum Insulated Tanker

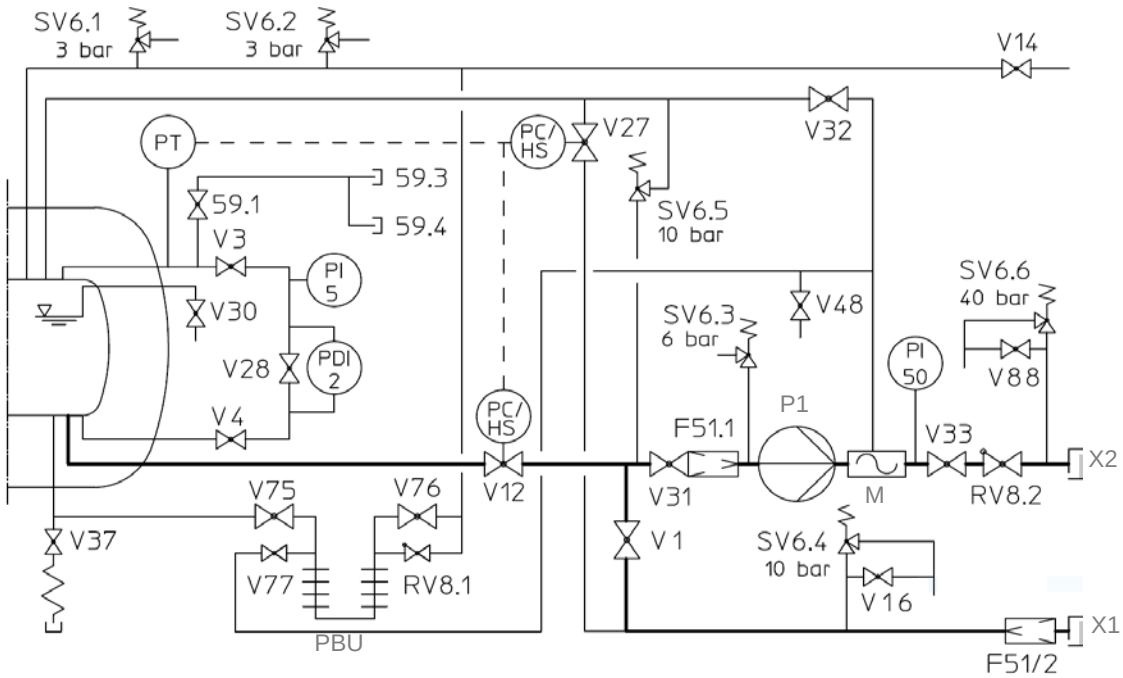

V	1	filling - withdrawal
PDI	2	level indicator
V	3	level indicator top pressure (-)
V	4	level indicator bottom pressure (+)
PI	5	tank pressure gauge
SV	6	relief valve
RV	8	check valve
V	12	main valve
V	14	pressure relief
V	16	vent valve, filling line
V	27	filling line, top
V	28	adjusting valve
V	30	trycock
V	31	supply to pump
V	32	gas return from pump
V	33	pump outlet
V	37	analysis sample valve
V	48	vent valve, pump
PI	50	pump pressure
F	51	strainer/filter
V	59	pressure connector
V	75	pressure build up, inlet
V	76	pressure build up, outlet
V	77	pressure build up, injection
V	88	vent valve, delivery line, pump
PC/HS		Pneumatic valves
P	1	Pump
M		Flow Meter
X	1	Filling coupling
X	2	Discharge coupling
PBU		Pressure build up unit

Appendix B – Cross Section of Road Tanker

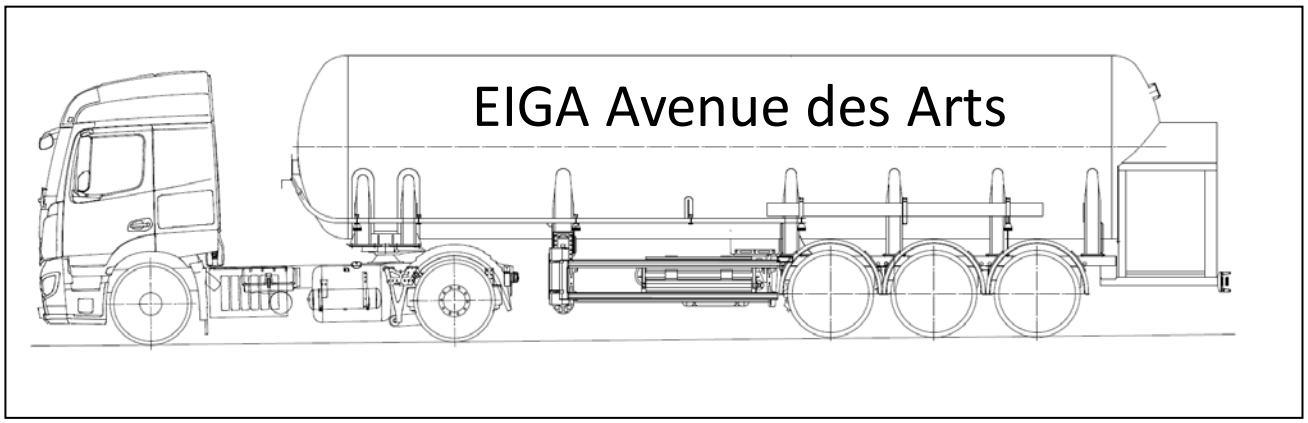

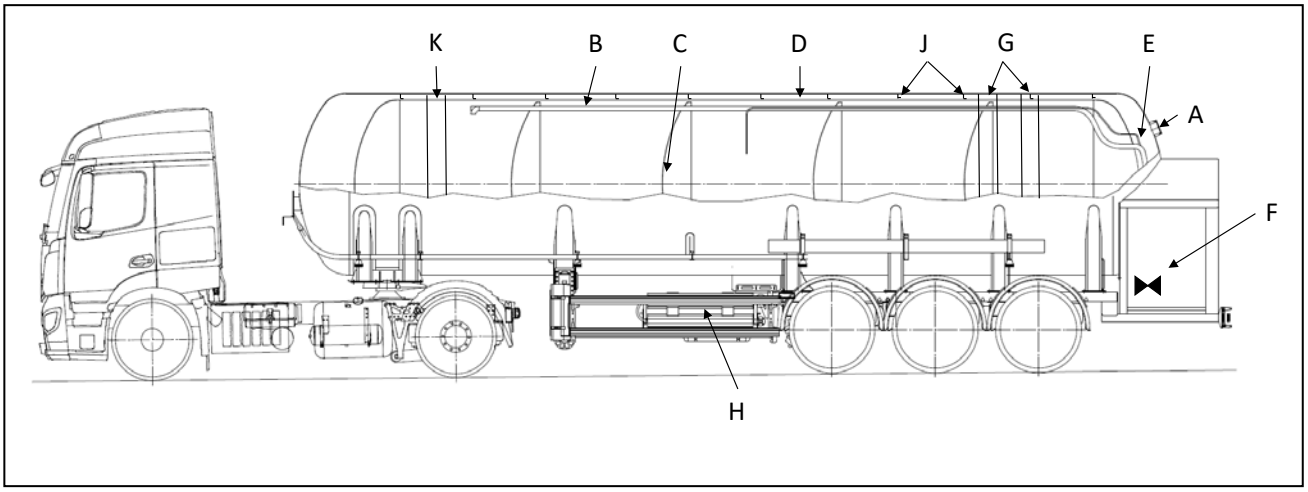

KEY

A	Blow off plate
B	Top fill sparge pipe
C	Dished baffle
D	Vacuum interspace / insulation
E	Vapour traps
F	Canopy and pipework (incl. emergency valve)
G	Rear fixed supports
H	Pressure rising coil
J	Outer jacket vacuum rings
K	Front sliding supports

Appendix C – Photographs of Typical Road Transport Equipment

Typical Road Tankers

- **Vacuum insulated tanks or trailers**

- **Non-Vacuum insulated tanks or trailers**

MEGC

Battery Vehicles (using tubes, cylinders and bundles)

Appendix D – Communications during transport emergency events

The following slides are intended for the guidance of transport emergency team members who may be approached by the press during, or following a transport emergency event.

Please refer to EIGA training package TP 08, Road Vehicle Emergency and Recovery.

Upon arrival at the Transport Emergency site, a media trained representative from the company should be contacted and notified to be responsible for all communications with the media.

Communication with media is an important aspect of dealing with incidents. Negative coverage can be avoided if communication follows the following:

- If possible, refer to the gas company's central media relations representative and have them deal with the media
- All reports shall contain only facts and no assumptions
- Professionalism when dealing with the media (consider what to say, when, to whom)

Central Media Relations responsibilities:

- Media meetings should be attended if possible
- Help draft/approve initial statement and updates
- Issue initial statement and update electronically or face-to-face
- Share the facts and cooperate with the emergency services in preparing and issuing press information
- Lead field press calls if required
- Act as "official spokesperson"
- Relieve workload of recovery specialists
- Activate the necessary offline and online media monitoring
- Define a communication strategy, taking into account all stakeholders
- Draft and validate the key messages

Media awareness of the incident will be almost immediate – if serious or spectacular or extensive

Media could obtain information by

- Phone calls from other drivers or gas company personnel
- Monitoring emergency services, airwaves
- Broadcast traffic reports (including "eyes in the sky")
- Social media

Interfacing with the media

- Implement internal communication process
- Own" the incident
- "Manage" the media
- Preferably handled the media relations team (ideally at the scene, otherwise remotely)
- Public emergency services are likely to be in dominant position with aspect of the media

- Casualties should only be advised once the facts are known
- Do not report personal details of people involved
- Give product characteristics – especially reassuring and positive aspects
- Be aware that news of incidents can spread quickly on social media

Typical Press Statement – Nitrogen

"*At (time) today a tanker carrying liquid nitrogen was involved in an incident on the (name or number of road) at (location). The tanker rolled over on the highway.*

The emergency services are in attendance and two people have been taken to (name) hospital.

Some liquid nitrogen is leaking, but the gas company confirms that the gas is non-flammable, non-toxic and harmless to the environment. Extracted from air around us and valued for its very low temperatures and inert properties, liquid nitrogen has a range of uses, from food freezing to extinguishing fires in coal mines."

Typical Press Statement – Oxygen

"At (time) today a tanker carrying liquid oxygen was involved in an incident on the (name or number of road) at (location). The tanker rolled over on the highway.

The emergency services are in attendance and two people have been taken to (name) hospital.

Some liquid oxygen is leaking, but the gas company confirms that the gas is oxidising, non-flammable, non-toxic, non-explosive and harmless to the environment. It is widely used for many applications like healthcare."

Appendix E – Typical Check List For Person Receiving Emergency Telephone Call

General INFORMATION

CALLERS NAME: …….. TEL.NO.: …….

DATE: …… TIME OF CALL: …….

IS CALLER: DRIVER POLICEMAN FIREMAN AMBULANCE MAN MEMBER PUBLIC

IF CALLER IS NOT FROM EMERGENCY SERVICES HAVE POLICE BEEN INFORMED YES/NO

HAVE FIRE BRIGADE BEEN INFORMED YES/NO

TELEPHONE NUMBER FOR CONTACT AT SCENE:

NATURE OF EMERGENCY

WHAT IS THE SITUATION (AT TIME OF CALL):

…….

WHAT HAPPENED:…….

……

……

……

……

WHEN DID INCIDENT OCCUR:

……

WHERE DID INCIDENT OCCUR: ROAD:

……..

TOWN: …… COUNTY: ……

IF MOTORWAY – NEAREST EXIT: ……..

MARKER NO.: ……

IS DRIVER INJURED: YES/NO INJURIES:

……

ARE OTHERS INJURED: YES/NO INJURIES:

……

NO. INJURED: ……..

TYPE OF VEHICLE AND NATURE OF PRODUCT

WHICH TYPE OF VEHICLE IS INVOLVED: TANKER TUBE TRAILER CYL. VEHICLE DRUMS

WHICH TYPE OF PRODUCT IS INVOLVED: ……

IS PRODUCT LEAKING OR SPILLED: YES/NO IF YES, WHY

……

……

……

FLEET NO. OF VEHICLE AND TRAILER: …….. IS ROAD CLOSED: YES/NO

ANY OTHER VEHICLES OR PRODUCT INVOLVED IN EMERGENCY: YES/NO

ANY OTHER PUBLIC DISRUPTION: YES/NO

IF YES, DESCRIBE:

……

……

……

ACTION

INITIATE THE TRANSPORT EMERGENCY PROCEDURE

- If relevant, request caller to stay by telephone to await a call from a company representative.
- Immediately contact appropriate person and read off all the above information.

Name of person receiving call:

……

Name of person accepting responsibility:

……

Time and Date of transmission of details from this document:

……

Signature/Location of Initial Contact:

……

Send this form to your Supervisor as soon as practical.

Appendix F – Example of a Transport Emergency Communications Flow Chart

Sheet (1)

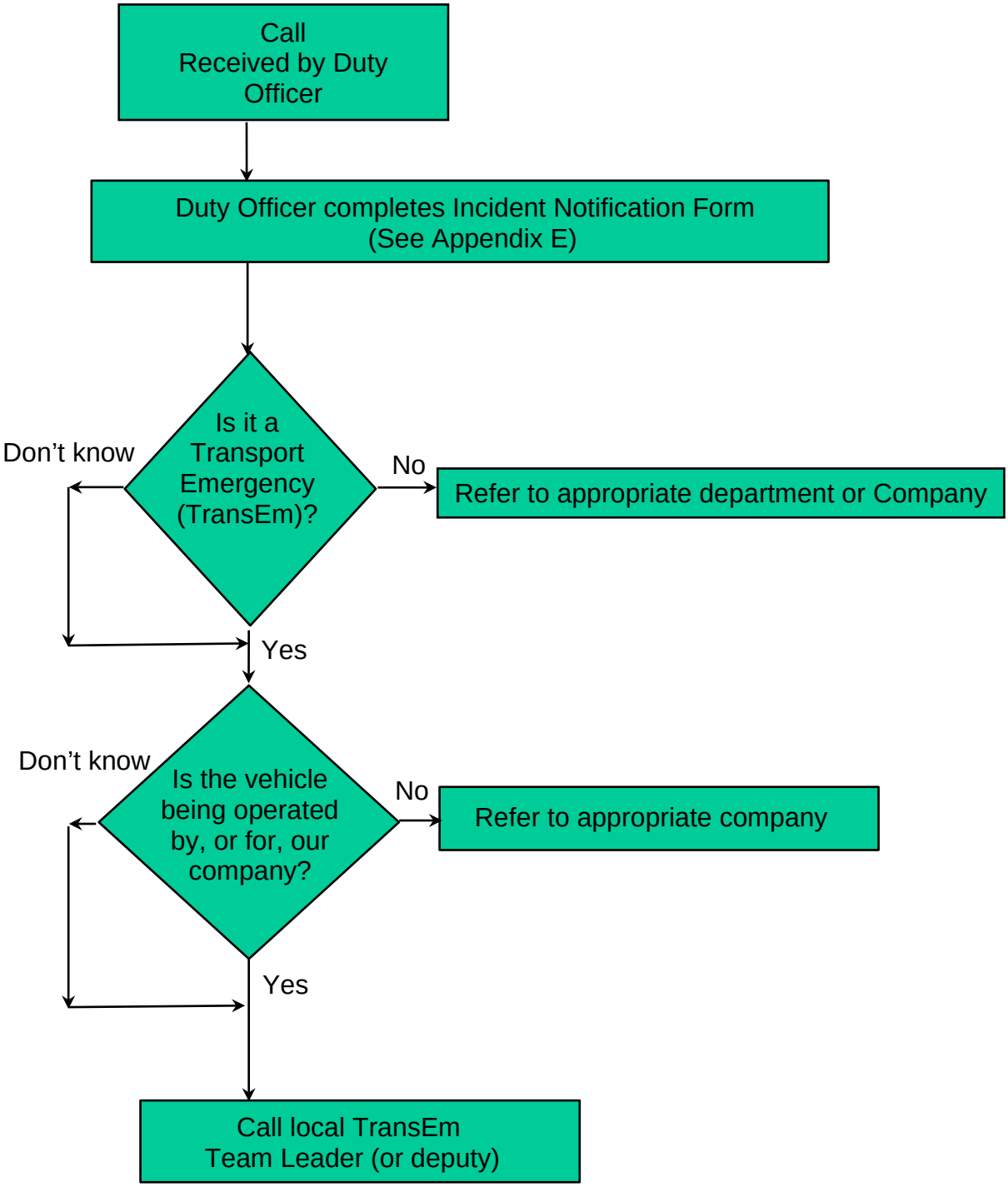

Example of a Transport Emergency Communications Flow Chart
Sheet (2)

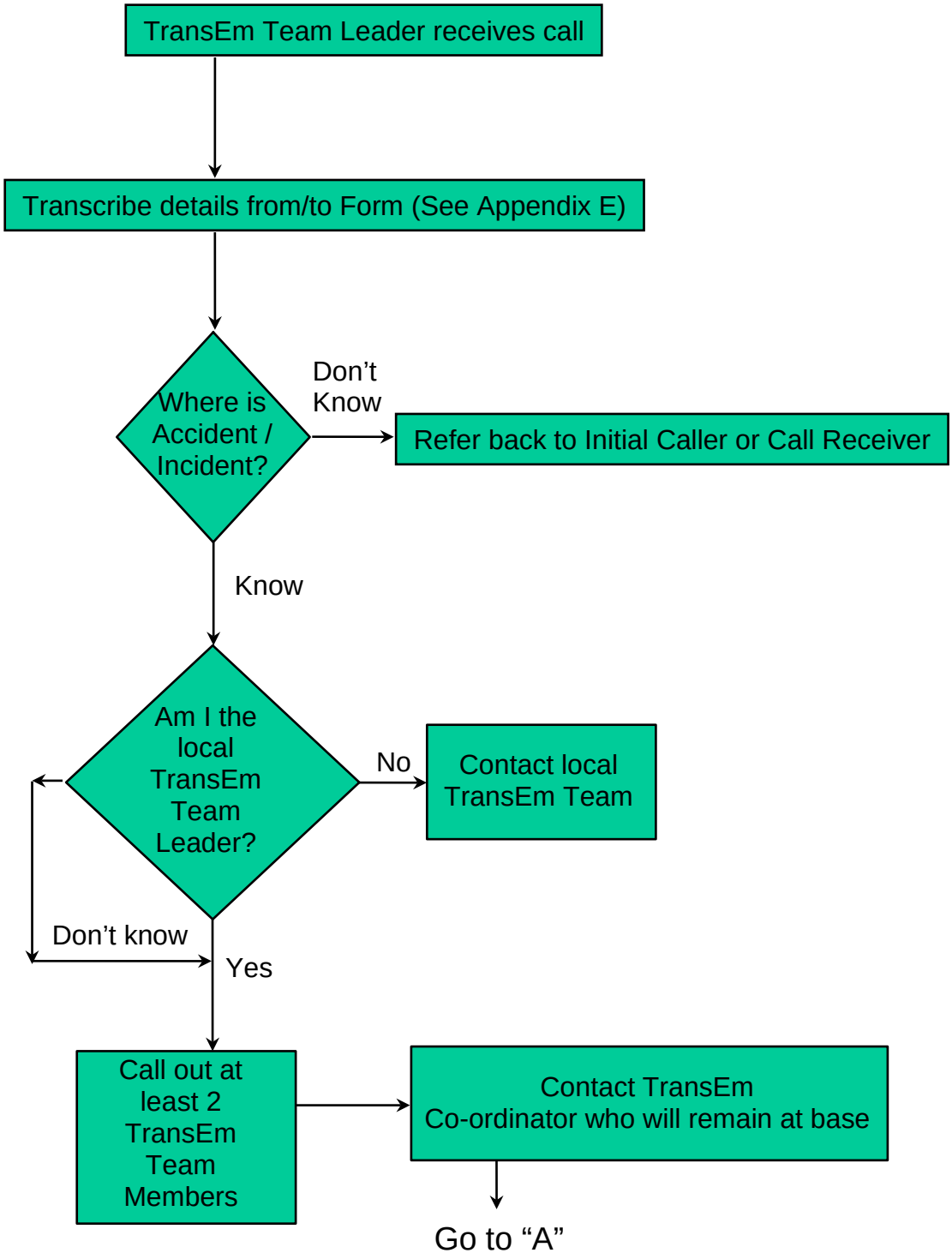

Example of a Transport Emergency Communications Flow Chart
Sheet (3)

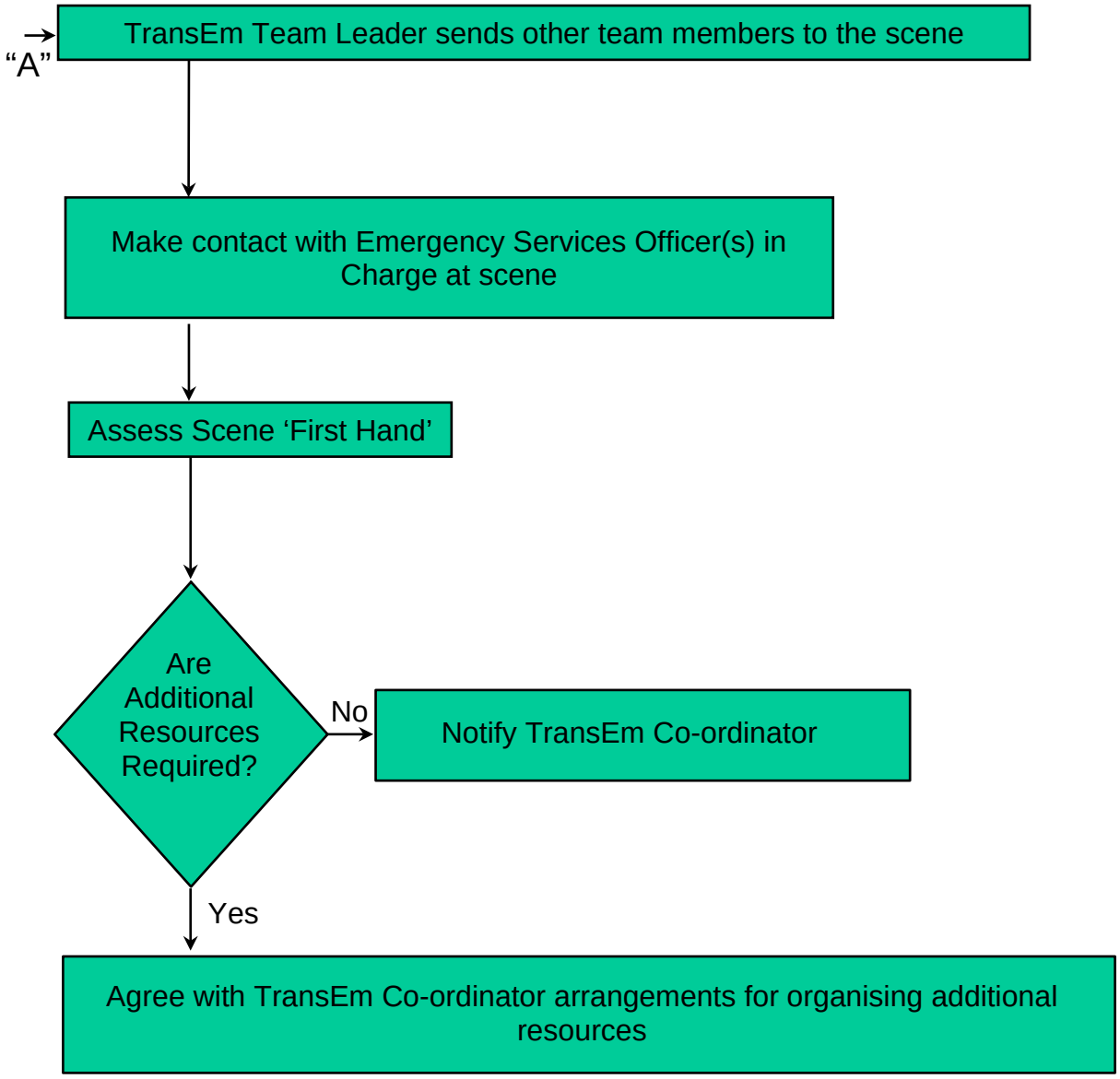

Example of a Transport Emergency Communications Flow Chart
Sheet (4)

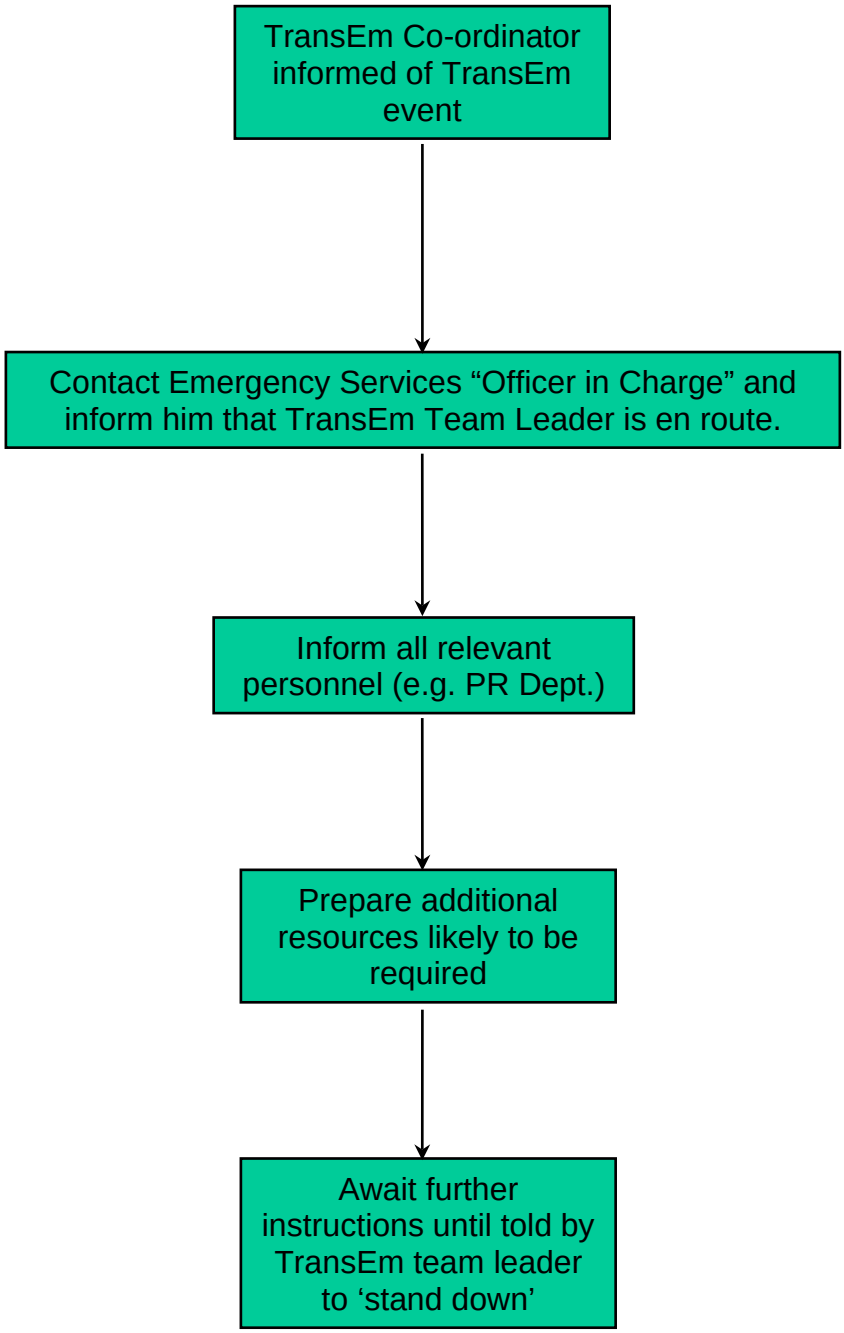

Appendix G – Example of Typical Transport Emergency Equipment

Typical transport emergency requirements

Each region of an organisation should provide a sufficient transport emergency response capability. This will include provision of appropriate Transport Emergency Teams and equipment to deal with transport emergencies. The equipment should be readily available for transport to the scene of any incident and may be specific to the vehicle and product. It may be held in a 'Transport Emergency Trailer'. The contents should be regularly checked and maintained for immediate use.
Whenever a transport emergency occurs, professional assistance will almost always be available at the scene from the local emergency services. These services generally provide a good range of emergency equipment and the necessary skills, for example fire and rescue services have first aid and cutting equipment capabilities. As a result, EIGA does not recommend any requirement to carry this specialised equipment.

Example of an Emergency Trailer.

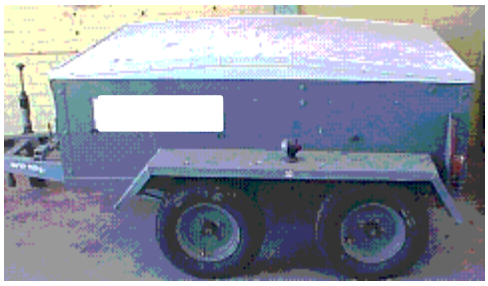

Example of Transport Emergency equipment which has been refined with experience and may vary according to the product (e.g. non sparking tools). The following provides a good guide.

Small hand tools / equipment Checklist

- Mobile/Cell Phone
- 1 x Hacksaw Blade
- 1 x large Hammer
- 1 x Set Spanners for Flange Nuts (4)
- 1 x Large Adjustable Spanner
- 1 Medium Adjustable Spanner
- 1 x Small Adjustable Spanner
- 2 Safety Torches
- 1 Roll PTFE Tape
- 1 x Small Pliers
- 1 x Set Screw Drivers (8)
- 10 litre Plastic water container
- Digital and/or Disposable Camera
- 1 Large Wrench
- 1 Foot Pump
- 1 Set Files (4)
- 1 Copper Mallet
- 1 Large Pliers
- 1 Pair Side Cutters
- 1 x Sharp knife

Larger equipment items

- First Aid Box
- Shovel & Broom
- Earthing rod
- Plastic Bags
- Recovery straps
- Rope
- Large Chisel
- Bolt Cutters
- Vent stack
- Fire Exinguisher(s)

Personal Protection Equipment (PPE)

- Overalls (fire retardant)
- Hard hats
- Cryogenic Gloves
- Waterproof overclothes
- Ear plugs
- Waterproof Boots
- Warning vests
- Large Plastic Sheet
- Eye Protection or Shield

Warning devices

- Warning Triangles
- 1x 500 Metres Barrier Tape
- Warning Lights
- Gas warning devices (as applicable)

Specific Product equipment

- 1 x Cylinder Valve Key
- 2 x Bursting Discs for relevant products
- Various adapters and seal rings
- Various product transfer hoses

Example of Contents

BOX 1

BOX 2

BOX 3

BOX3A

Appendix H – Tanker Recovery

Tanker Recovery Using Air Bags Two Recovery Vehicles

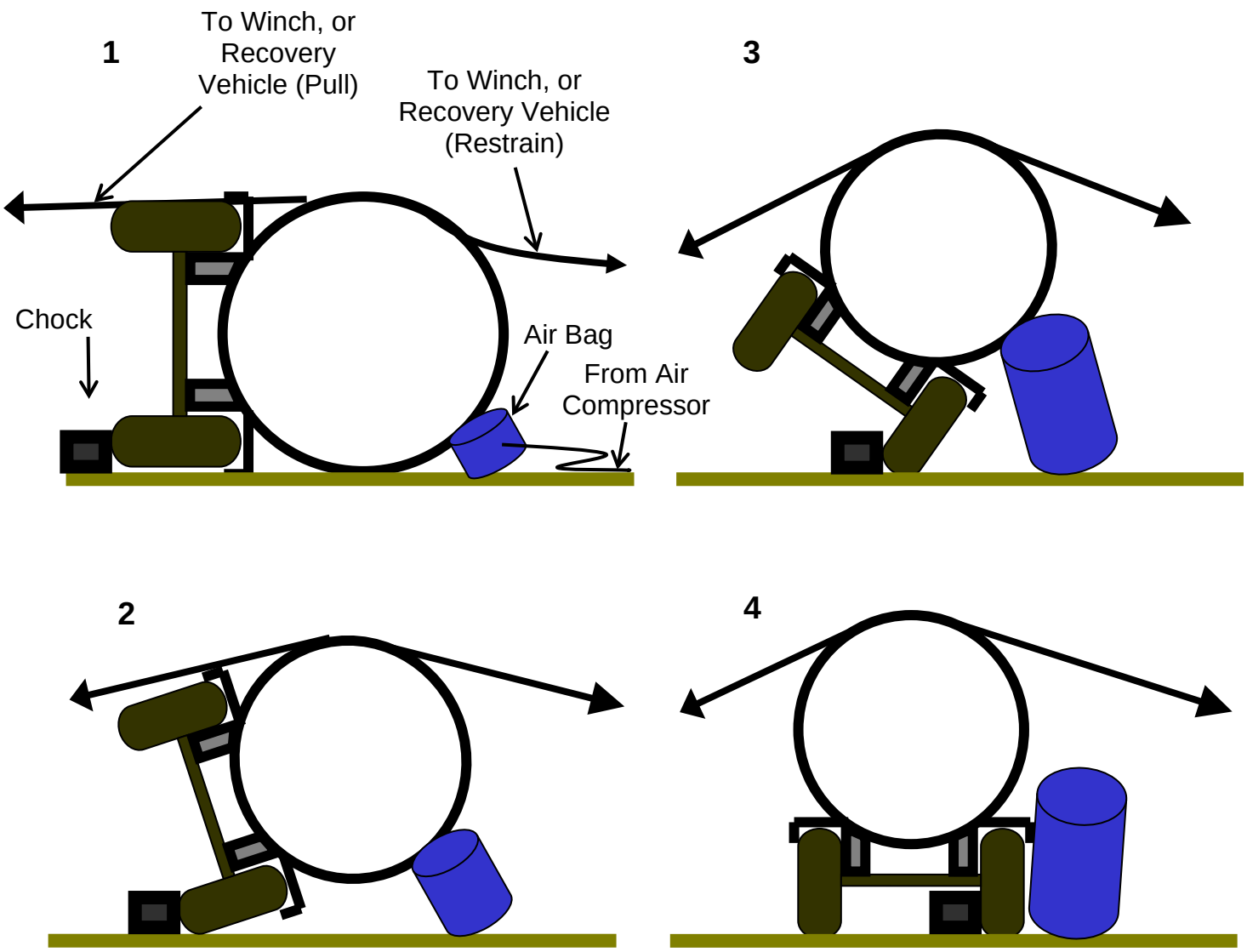

"Notes:

For manifolded cylinder trailers, tube trailers and MEGCs, the guidance given for conventional cryogenic tankers remains generally true.

Specific care, however, should also be taken with regard to the following fundamental differences:

- there are many additional sharp edges on these trailers which may create high stresses in the lifting equipment or puncture Air Bags. These edges should be covered by suitable protective material, but the use of Air Bags may not be practicable.
- some individual cylinder or tube supports may have become broken or distorted. The cylinders, or tubes, should therefore be secured (usually by webbing straps) prior to lifting the trailer.

2 For tank containers and MEGCs the corner supports provide the most suitable lifting

Tanker Recovery Using Two Recovery Vehicles

1

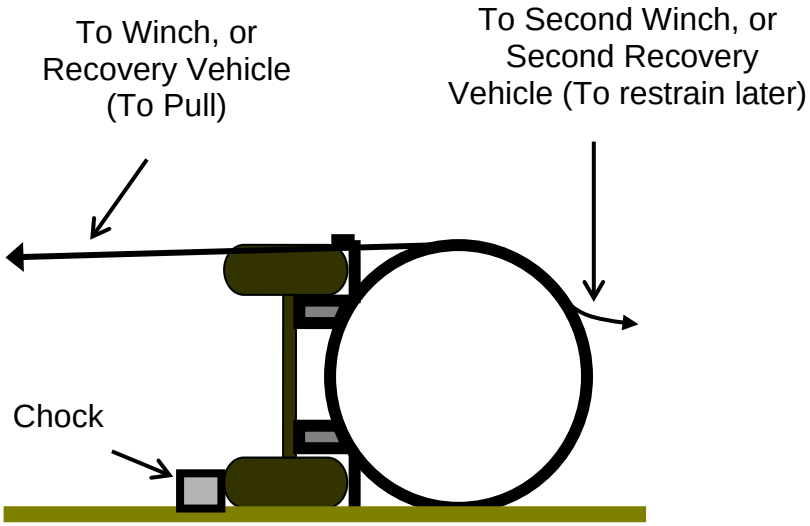

3

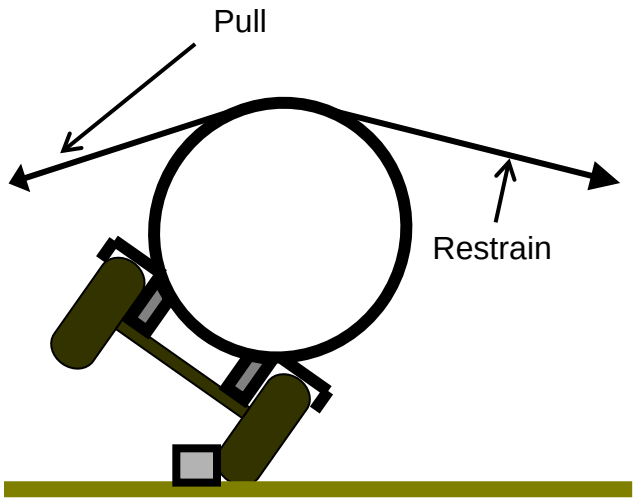

2

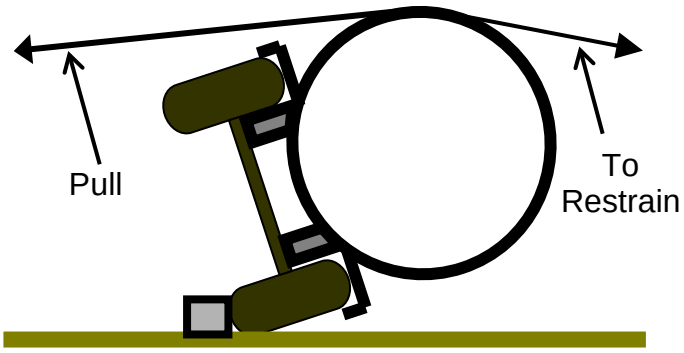

4

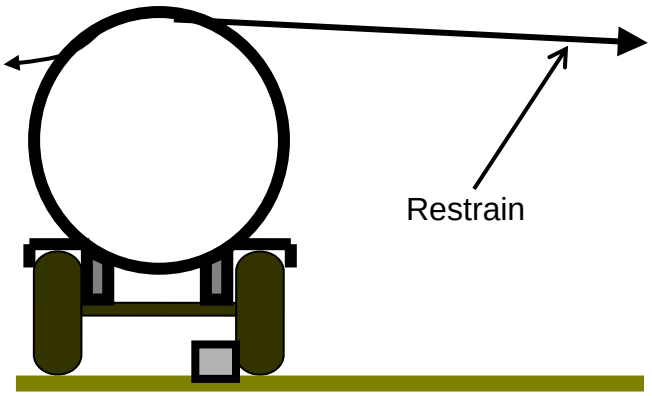

Tanker Recovery Using Two Cranes

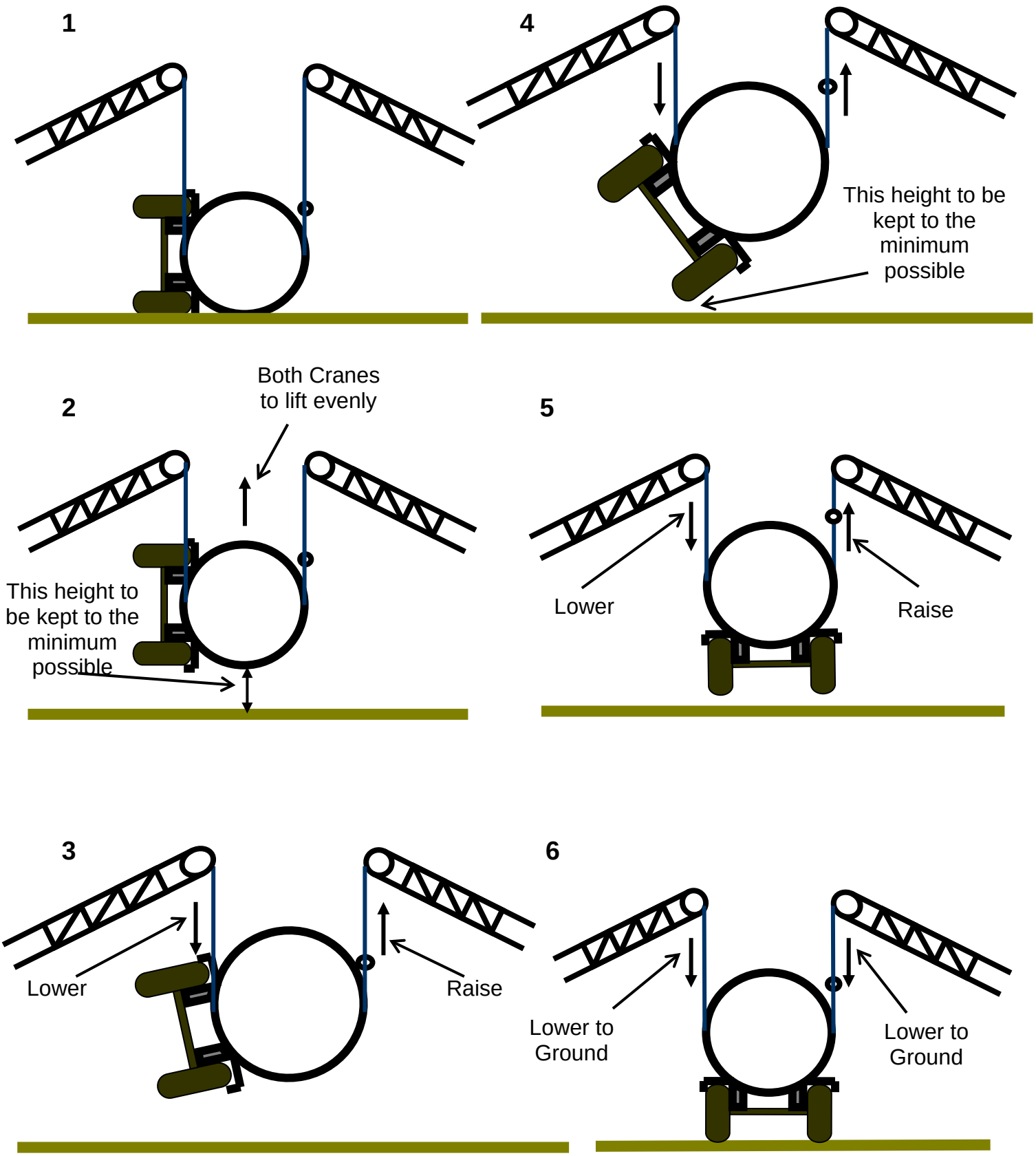

Appendix I – Safety aspects concerning Vapour Clouds

Vapour Clouds are produced by condensation of water in air by contact with cold gas.

There are many hazards involving vapour clouds, the main ones being:

- Reduced visibility for individuals working in or others entering such a cloud. This means that tripping is more likely and vehicle movement is extremely hazardous for all parties. Clouds will change shape and position depending on wind condition.
- The pool of liquid itself is an extremely serious hazard which will usually be invisible due to the vapour cloud.
- Dependent on the product type, oxygen enrichment or oxygen deficiency may occur within dense clouds.
- Extreme cold, which can cause cold burns, frostbite and hypothermia.
- The properties of materials can be adversely affected which can lead to their catastrophic failure.
- Where the original product is a flammable substance, for example liquid hydrogen, the gas cloud will be flammable

NOTE:
Be very careful when there is a leak of flammable gas especially if the gas is heavier than air, which may happen easily with cold gases (e.g. the majority of hydrocarbon gases). Such a gas may form a layer on ground level which can extend to a long distance from the origin of the leak and ignite in catastrophic way, in contact with a hot point, an electrical contact or an electrostatic discharge.
Never enter in a cloud of flammable gas.

See EIGA Doc 44 *Hazards of Oxygen-Deficient Atmospheres* [2] for further details on prevention of accidents arising from enrichment or deficiency of the oxygen in the atmosphere.

Entry into vapour clouds

Individuals may only enter a gas vapour cloud if all of the following requirements are satisfied:

- The gas is neither flammable nor toxic
- The individual has been trained in the hazards of cryogenics procedures / work instructions.
- This training should have been logged in the individual's training log.
- A second trained person, suitably equipped, is available to provide assistance if necessary.
- The individual is wearing appropriate personal protective equipment (see appropriate Safety Data Sheet)
- If a vapour cloud is being deliberately generated then the person operating the equipment or process should be competent.

Prior to entering the cloud, the individual should know:

- The product type.
- Where and how the cloud is being generated.
- The ground conditions (no liquid, tripping hazards, trenches).
- How the cloud has been generated

Note: Entry into a flammable gas vapour cloud should be prohibited.

Safety with vapour clouds

Never enter a cloud unless the guidance given above is followed.

Be particularly careful where:

- It rolls into low lying land i.e. below the ground level of the vessel which is generating the cloud;
- There is cryogenic liquid on the ground - that is where injury may occur;
- A pipe discharges into low lying areas;
- The area may become a confined space;
- There are depressions in the ground where cryogenic liquid can accumulate and
- Where the cloud covers a roadway where vehicles of any type may travel.

Discharge of liquid

Discharge of liquid should only occur when either:

- Off loading a tanker into an approved vessel or through an approved engineered system; or
- Quantities of cryogenic liquid, or gas, are to be disposed of into an designated area.

Any individuals who may be affected by a cryogenic cloud have been notified, and the area suitably secured against entry.

Example:
Several gases are lighter than air at typical ambient temperatures and pressures. However, gas vapours arising from cryogenic liquids are always very cold and this changes the behaviour of the gas in that it always increases its relative density.

A good example of a cold gas is nitrogen where at typical ambient temperatures and pressures, this gas is considered lighter than air, but at low temperatures the gas is heavier than air and will collect in pits, hollows and trenches.

Appendix J – Safety aspects concerning Fire

Fires are typically caused by:

- Overheated tyres
- Leak of flammable substance (vehicle or gas being transported)
- Third party collision.
- Mechanical or electrical defects of the vehicle.

As such, any fires which involve vehicles being loaded with, carrying, or unloading product shall be considered as being extremely serious. In the case of a vehicle accident, a fire could be the cause of vessels or receptacles rupturing, damage to the vehicle or vehicle equipment and even other vehicles. Safely extinguishing most of these fires could well be beyond the capability of the vehicle driver(s) and the following paragraphs give guidelines as to what may be the most appropriate action to take in specific circumstances after calling the Fire Service.

The safety of all personnel shall be the first priority.

If a fire is to be extinguished the safest time to tackle it is as early as possible and certainly before it escalates into a situation where it is “out of control”.

The general actions to be followed by the driver in case of fire are:

- Stop the engine.
- No naked lights. No smoking.
- Notify police and fire brigade as soon as possible.
- Mark roads and warn other road users or passers-by.
- Inform the public about the hazards and give advice to keep upwind.

Drivers should be instructed during training to deal with minor vehicle fires. They shall not attempt to deal with any fire involving the load.

When acting on a fire the fire fighter(s) should **at all times**, carefully consider their actions and proposed actions, taking into account the following priority list:

- Safeguard all persons
- Avoid escalation of the incident
- Minimise any environmental damage

They shall be competent in the use of their fire extinguishers.

Loading and unloading sites

Drivers should comply with local/customer site emergency procedures.

Tyre Fires

Tyre fires can generate extremely high pressures within the tyre which may result in the tyre bursting violently. This can lead to severe injury, even fatality, to any persons in close proximity to the tyre if it explodes.

One other danger of a tyre fire is that it can lead to a vehicle and/or product fire.

Tyre fires, when they occur, often look comparatively minor while in reality the fire may be burning internally and could lead to under estimation of the dangers. After a tyre fire has been apparently extinguished, there may still be very hot components or tyre parts, hot enough to lead to re-ignition of the tyre.

The first action if signs of overheating are detected or if flames break out should always be immediately to call, or get someone else to call, the fire service who can spray down the tyre, wheel and surrounding area with water from fire hose(s) until all the heated parts have been completely cooled.

The use of dry powder extinguishers may be ineffective, as it does not provide an adequate source of cooling. Consequently, the risk of bursting should be considered before using a fire extinguisher.

Note:
Particular caution is necessary in the case of twin tyres as one tyre may have heated the other to a sufficiently high temperature, which could result in ignition or even bursting of this other tyre.

Never use a fire extinguisher whilst the driver is under a vehicle.

The driver should:

- if the vehicle is moving, stop in a safe area as soon as possible, ideally away from other vehicles, any pedestrians, residential areas, flammable materials,
- call, or get someone else to call, the fire service,
- consider the use of the vehicle fire extinguishers,
- stay clear of the area of the hazard from a bursting tyre,
- keep other people away,
- not work on, or allow others to work on, the vehicle until the area has completely cooled.

For further information, see EIGA Safety Alert 17 “Prevention of Accidents due to Overheated or Burning Tyres”.

Cylinders and Tubes in fire situations

Compressed gas cylinders and tubes have the following attributes:

- Will typically have filling pressures of up to 300 bar at 15°C.
- Internal pressure increases with heat.
- High temperature and uneven heating affect the strength of the material(s) of manufacture.
- Most do not have a pressure relief device for protection against excess pressure.
- Failure (leak or rupture) may be without warning

Liquefied gas cylinders/tubes may have the following additional attributes:

- When the temperature rises, the pressure rises rapidly.
- These may contain a pressure relief device, fitted to the valve or any pipework for protection against excess pressure.

Acetylene cylinders differ from other gas cylinders in that their interiors are filled with a porous filler material (porous mass). Liquid solvent in a carefully determined amount saturates this filler and acts as an absorbent for the acetylene. When the valve on a charged cylinder is opened, the acetylene comes out of the solution and passes out in gaseous form. Like other flammable gases, acetylene can form explosive mixtures with air and may react violently with oxidants.

Acetylene cylinders can be fitted with a fusible metal plug(s) threaded through a hole in the base or shoulder of the cylinder or in the valve. As the temperature rises the plug melts, allowing release of acetylene gas into the atmosphere, relieving the pressure. Nevertheless, fusible plugs will not prevent cylinders from bursting. They may only delay such bursting.

An acetylene cylinder, which has been subjected to even moderate heating through being involved in a back fire, or adjacent to a fire, should be considered as being extremely dangerous.

Progressive decomposition of the acetylene contained in the cylinder can take place, raising the temperature and the pressure of the cylinder and is likely to continue unless the cylinder is effectively cooled. This decomposition can continue for many hours if the cylinder has been exposed to heat resulting in a potential cylinder rupture.

It is essential that certain precautions are taken, as given in the accompanying flow diagram below to avoid injuries and fatalities to personnel and firefighting services. This document covers bulk transport vehicles only, so the advice below is restricted to acetylene bundles.

Vehicles in Fire

It is rare for a vehicle to be totally engulfed by a fire. Normally only a part of it is affected. The advice given on the safety data sheets, should be followed.

If a vehicle becomes involved in a fire the following should be considered:

- The outer jacket and any insulation material of a tanker will provide some protection for a short period. If this is made from aluminium or other non-metallic materials then this will be a significantly shorter period than for steel.
- In the case of a vacuum insulated tanker with powder insulation the protection will be more than other types.
- Heat in-leak will cause liquid gases to expand and the pressure rise will be evident leading to safety devices opening which may be accompanied by a loud noise.

  Note: - tanker safety devices are designed to cope with fire engulfment situations and so discharge pipework should not be blocked.
- Some gases will increase the fire intensity while others will have a partial reducing effect.
- In the case of compressed and certain other liquid flammable gases a leak which has ignited is not always visible to the naked eye, but a loud noise may be heard.
- Spraying safety devices venting gas with water may cause the safety device to clog and escalate the incident (especially in the case of refrigerated liquid gases).
- In the case of battery vehicles the cylinders should be sprayed with water to keep them cool.
- Cylinders should continue to be sprayed in order to ensure that they are cool before recovery is attempted.
- The products of combustion may be harmful e.g. paint, some insulating and cladding materials.
- A quarantine period should be set before and after the vehicle is moved to a safe place depending on the severity of the incident and the gas being transported.

Appendix K – Safety aspects concerning Toxic gases

There are special hazards when toxic products are involved. The following is general guidance, however;

- Specific national regulations, if any, shall be considered;
- Always consult the driver's transport emergency instructions;
- **Always obtain advice from an expert practitioner before dealing with toxic gases if you are not an expert yourself**.

Nature of the risks when toxic gases are involved
There is a fundamental difference in the process by which toxic gases harm people compared to asphyxiant gases. With asphyxiants, the person may lose consciousness, and may ultimately die, because of oxygen deficiency in the atmosphere which he is breathing.

Toxic gases harm, and may kill, people by a chemical process which poisons the person's body – irrespective of the amount of oxygen in the atmosphere. It is reminded that toxic gases might pose potential fatal health hazards at very low concentrations.

Points to note are:-

- In an emergency, the risks of flammable gases are reduced by avoiding ignition sources and the risks of non-flammable, non-toxic gases are reduced by using an oxygen monitor. These typical approaches to an emergency are not valid for toxic gases;
- Toxic gases may possess other hazardous properties (e.g. flammable, pyrophoric, corrosive, oxidant etc.);
- Toxic gases may be odourless & colourless;
- Gas may be either toxic by inhalation or by absorption through skin even from very small quantities;
- Appropriate gas detection devices are required to confirm safety of local atmosphere (oxygen monitors cannot be used for this task);
- Unless it can be confirmed that the local atmosphere is safe, it should be considered as being toxic.

Additional Information:

- Be aware that valves may start leaking when heated, therefore:
  - Use proper protective equipment (see Safety Data Sheet).
  - Check for leakage with suitable leak detection method.
  - Where appropriate, advise Emergency Services to erect barriers and warning notices to keep affected area clear.
- In certain circumstances, it may be advisable to recover a leaking toxic gas cylinder in a "salvage pressure receptacle" (often known as a "cylinder coffin").

Clearly mark any damaged or heat-affected cylinders / tubes and inform the gas supplier before further handling or transport.

Further informatio can be found in:
EIGA Doc 30 *Disposal of Gases* [1]
EIGA Doc 80 *Handling Gas Container Emergencies* [4]
EIGA Doc 130 *Principles for the Safe Handling and Distribution of Highly Toxic Gases and Mixtures* [5]
EIGA Doc 136 *Selection of Personal Protective Equipment* [6]